Linear Actuators

Linear actuators for industrial, mobile, medical, office and domestic applications.

THOMSON®

Linear Motion. **Optimized.**™

www.thomsonlinear.com

THOMSON®

Linear Motion. **Optimized.**™

Thomson -
Linear Motion. *Optimized.*

Often the ideal design solution is not about finding the fastest, sturdiest, most accurate or even the least expensive option. Rather, the ideal solution is the optimal balance of performance, life and cost.

Thomson is best positioned to help you most quickly configure the optimal linear motion solution for your application.

- **Thomson invented anti-friction linear bearing technology. We own the broadest standard product offering of mechanical motion technologies in the industry.**
- **Modified versions of standard product are routine. White sheet design solutions available across our entire portfolio.**
- **Choose Thomson and gain access to over 70 years of global application experience in diverse industries including packaging, factory automation, material handling, medical, clean energy, printing, automotive, machine tool, aerospace and defense.**
- **As part of Danaher Corporation, we are financially strong and unique in our ability to bring together control, drive, motor, power transmission and precision linear motion technologies.**

Thomson is the name you can trust for quality, innovation, on-time delivery, controlled costs, and reduced risk.

In addition to the information contained in this document, a wealth of product and application information is available online at www.thomsonlinear.com. Also online are downloadable 3D models, software tools, our distributor locator and global contact information for Thomson. For immediate assistance in Europe contact us at +44 1271 334 500 or email us at sales.uk@thomsonlinear.com.

Talk to us early in the design process to see how Thomson can help identify the optimal balance of performance, life and cost for your next application. And, call us or any of our 2000+ distribution partners around the world for fast delivery of replacement parts.

The Danaher Business System -
Building sustainable competitive advantage into your business

The Danaher Business System (DBS) was established to increase the value we bring to customers. It is a mature and successful set of tools we use daily to continually improve manufacturing operations and product development processes. DBS is based on the principles of Kaizen which continuously and aggressively eliminate waste in every aspect of our business. DBS focuses the entire organization on achieving breakthrough results that create competitive advantages in quality, delivery and performance – advantages that are passed on to you. Through these advantages Thomson is able to provide you faster times to market as well as unsurpassed product selection, service, reliability and productivity.

Local Support Around the Globe
Application Centers Global Manufacturing Operations Global Design & Engineering Centers

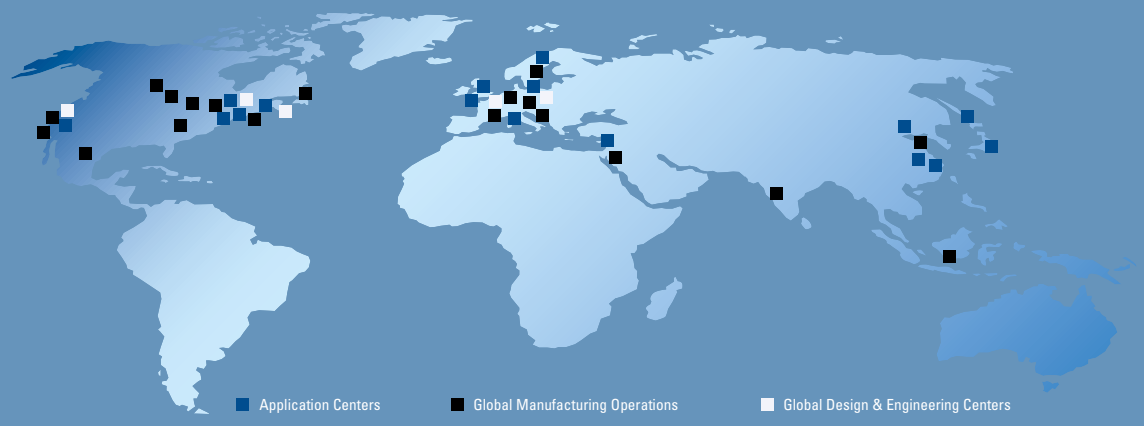

Introduction

Table of Contents

Introduction **3**
Company Introduction 4
Product Introduction 5
The Benefits of Electrification ..... 6 - 7
Actuator Applications 8
Selection Procedure 9

Performance Overview **10**
Standard Actuator Range ..... 10 - 11
Non-driven and Rotary Actuators 12
Legacy Actuators 13

Electrak® Actuators **14**
Electrak 1 ..... 14 - 15
Electrak 1SP ..... 16 - 17
Electrak 050 ..... 18 - 19
Electrak PPA-DC ..... 20 - 21
Electrak 10 ..... 22 - 23
Electrak LA14 ..... 24 - 25
Electrak Pro ..... 26 - 27
Electrak 5 ..... 28 - 29
Electrak LA24 ..... 30 - 31

Lifting Columns **32**
TC16 ..... 32 - 33
DMD ..... 34 - 35
DMA ..... 36 - 37

Rodless Actuators **38**
LM80-H ..... 38 - 39
LM80-V ..... 40 - 41
LM80-I ..... 42 - 43

Electrak® Non-driven Actuators **44**
Electrak PPA-M ..... 44 - 45
Elactrak FA14 ..... 46 - 47

Electrical Wiring Diagrams **48**
DC-actuators ..... 48 - 49
AC-actuators 50

Actuator Controls **52**
DPDT Switch 53
AC-063 ..... 54 - 55
AC-247 ELS ..... 56 - 57
Control DCG ..... 58 - 59
Control Accessories ..... 60 - 61

Accessories and Spare Parts **62**
Mounting Components ..... 62 - 64
Electrical Components ..... 65 - 66
Spare Parts 67

Ordering Keys **68**
Electrak DC-actuators ..... 68 - 72
Electrak AC-actuators ..... 73 - 74
Lifting Columns 75
Rodless Actuators ..... 76 - 77
Non-driven Actuators 78

Glossary **80**
A - C 80
D - G 81
H - Life 82
Lift - O 83
P - Si 84
Sp - W 85

Application Data Form **86**
Worksheet 86
Drawing/notes 87

Introduction

Company Introduction

The history of the Thomson Electrak® actuator goes back to the development of ball screw actuators 40 years ago in Marengo, IL, USA. The first generation of general purpose actuators were developed for control of accessory drives on garden tractors and farm equipment. Since that simple beginning, actuators are now used in all types of equipment to automate a process, remove people from dangerous situations, provide remote control or make difficult, tedious manual jobs easier.

The linear actuators in this catalog represent proven design concepts found in the entire Electrak series. From light load 050s to the high performance Electrak Pro series capable of handling loads up to 9000 N,Thomson offers features unavailable anywhere else.

The world's most versatile actuator selection
Thomson combined the clevis to clevis mount Electrak series, and the trunnion mount Electrak PPA units, to provide the most versatile selection of linear actuators available. Our actuator team has solved over 10000 tough application challenges with even tougher actuators. We built our reputation in the mobile off highway market in extremely demanding operating conditions. And if you can't find the actuator to meet your application, call us for a cost effective actuator built to your needs. Thomson builds more custom actuators than anyone.

You can count on Thomson
Thomson linear actuators – rugged, reliable remote linear motion control with the push of a button. You can count on Thomson for worldwide sales, service, application support and local availability. Please visit www.thomsonlinear.com for more information.

1967	1969	1974	1982	1984	1987	1988	1991
The first generation of actuators for use in garden tractors and farm equipment is released.	First line of ball screw driven actuators with right angle AC and DC motors is released.	First line of actuators with parallel motors and both acme and ball screw drive is released.	The "Tiger" line actuators are released for OEMs.	Electrak 1, 2, 5, 10 and 100 are released for distribution.	Electrak 205 and the first line of MCS controls are released.	Electrak 1SP with feedback potentiometer is released.	The first lifting columns, DMD and DMA, are released.

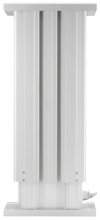

Introduction

Product Introduction

Thomson actuators are easy to mount and operate, require no maintenance, don't leak hydraulic fluid, are easy to incorporate into an automated process and once installed they will work reliably under the toughest conditions year after year.

Actuators offer advantages over mechanical and hydraulic systems in many applications. They are self-contained, rugged, and durable, making them ideal anywhere you want to lift, lower, push, pull, rotate or position a load.

Compact design
With their compact size, actuators can be located in confined areas. An actuator with a 100 mm stroke length can produce 9000 N of force from a 290 mm package. Electrak 1 and 050 series actuators fit small areas with package lengths as short as 115 mm.

Rugged and reliable
All Thomson actuators incorporate strong, high quality components to assure trouble-free service. Rugged spur, worm or helical gearing, aircraft quality lubricants and high performance motors provide the maximum life and value. The actuators are gasketed and sealed throughout for protection in wet, dirty and oily environments and are ideal for use on outdoor equipment. The rod style actuators have stainless steel or aluminum extension tubes to resist corrosion.

Maintenance-free
All adjustments and lubrication are made at the factory and no maintenance is required or recommended. Consistent, repeatable performance is provided for the entire lifetime of the actuator.

Bidirectional
Thomson actuators can push and pull loads ranging from one to 900 kg, and can extend up to 900 mm. With the Thomson series of actuator controls, you can create an actuator control system to meet your particular motion control requirements.

Safe operation
Motors used on Electrak actuators utilize thermal switches in their windings or Electronic Load Monitoring to shut the actuator off in case of overheating. A standard overload clutch or Electronic Load Monitoring will stop the motion if the load is too great or at the end of a stroke. All linear actuators will hold their loads with power removed.

Versatile
Stroke lengths of 25 to 1500 mms are available and speeds are as high as 110 mm per second. Actuators are easy to apply, quick to install and usually only requiring two wires for operation. A wide variety of options and controls makes it easy to find the perfect actuator for your application. And if you have special needs, cost effective custom solutions are our speciality.

1992	1994	1998	1999	2000	2004	2006
A patent for a load lock device is granted.	Electrak 1LL is released.	Electrak 150 with two patents is released. AC control line is released.	Electrak 050 with patented design and the first rotary actuators are released.	The first LM80 rodless actuator is released.	The triple profile lifting column TC16 and the "sweeper" actuator are released.	The Electrak Pro actuator line and the DCG control line are released.

Introduction

The Benefits of Electrification

Electrification is converting manual, hydraulic and pneumatic operations to electromechanical motion. Substantially improved machine performance and cost advantages can be gained through electrification.

Reduce costs

- Electric actuation components cost less than comparable hydraulic and pneumatic systems.
- One electric linear actuator is faster and easier to install than the multiple hydraulic and pneumatic components required to achieve the same function.
- Electric actuators feature quick and predictable system tuning when compared to the headaches of configuring hydraulic systems and their components which contend with power variation, temperature variation, and non-linear performance profiles.
- Compare zero maintenance electric actuators against the fluid replacement, leak repairs and other routine maintenance needed to support hydraulic systems.
- Eliminate the environmental problems and costs associated with hydraulic fluid leaks and fluid disposal.

Boost productivity and efficiency

- Improve control over critical machine operations with:
  - Multiple digital and analog feedback options
  - Fixed and programmable limit switches for "teach and repeat" positions
  - Low voltage switching options that can interface directly with programmable PC/PLC controllers
  - Pulse width modulation for variable speed control
- Superior accuracy and repeatability
- Link and automate simultaneous processes
- Reduce down time with:
  - Zero maintenance
  - Longer component life
  - Redundancy through manual override
- Improve safety and reduce costs by removing people from danger with convenient remote control

Great opportunities for electric conversion

Making jobs easier

- Raising and lowering a deck on a mower, paver or floor scrubber.
- Shifting manual transmission.
- Lifting wheelchairs into a vehicle.
- Opening and closing doors on buses or vans.

Automating a process

- Moving twine across a round bale of hay for consistent wrap.
- Varying the chute opening on a salt/sand spreader based on speed for consistent application.
- Lift and lower pantographs on electrical trains and trams.

Providing remote control

- Throttle control from the rear of garbage trucks.
- Positioning the discharge spout on a large chipper, snowblower or combine.
- Opening a chute on a salt/sand spreader.
- Positioning of solar energy panels and wind power plant turbines.
- Opening/closing the engine hatch on boats.
- Positioning boat, handicap vehicle seats.
- Belt tensioning.

Removing people from danger

- Sliding a cover over the stairs in a recreational vehicle.
- Throttle control for a tree stump grinder to keep the operator away from moving parts or flying debris.
- Medical waste/refuse compacting.

Replacing hydraulics or pneumatics

- Power steering.
- Dump beds on ATVs.
- Positioning mower decks on golf course equipment.

Introduction

The Benefits of Electrification

Replacing hydraulic or pneumatic cylinders with electrical linear actuators means a simpler and smaller installation, easier control, lower energy costs, higher accuracy, less maintenance, less noise and a cleaner, healthier environment.

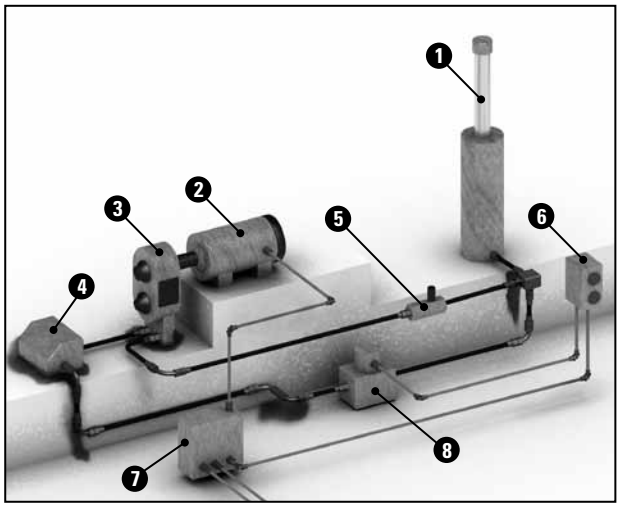

You can design, purchase and install all these components or you can select and install an actuator and control.

Single acting, uni-directional hydraulic cylinder system
1. Hydraulic cylinder
2. Electric pump motor
3. Hydraulic pump
4. Hydraulic oil resevoir
5. Check valve
6. Operator push button box
7. Relay cabinet
8. Unloading valve

This single acting, uni-directional hydraulic cylinder system is one of the simplest hydraulic solutions. This system only allows consistent performance in one direction. In order to get consistent performance in both directions a bi-directional system would be required which is even more complex and costly.

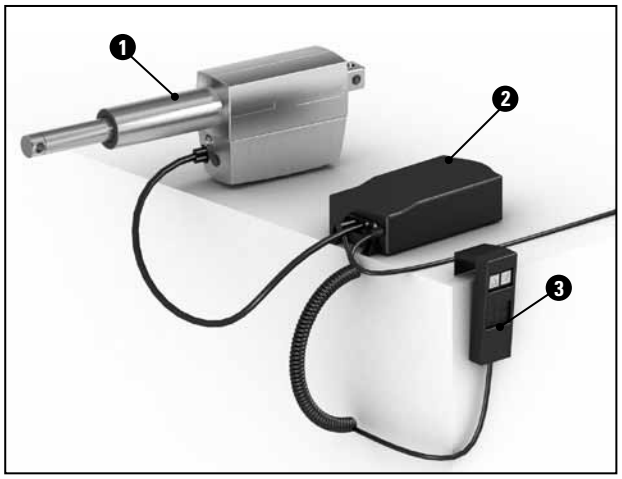

Plug and play type of connections, simple installation and no need for any set up or adjustments ensures accurate, clean and trouble free operation within the hour.

Electric linear actuator system
1. Linear actuator
2. Actuator control
3. Hand held control pendant

This simple electrical actuator system will ensure consistent operation in both directions. It will also give you added features such as electronic load monitoring, end of stroke limit switches, mid stroke protection and manual override operation in case of power failure. Optional features such as analog or digital position feedback, adjustable end of stroke limit switches, end of stroke indication outputs and signal following capability are also available. Another advantage is that a system like this is easy to integrate with other control systems normally found in industrial systems or vehicles such as PLC's, micro-controllers, computers or simple relay based systems.

Introduction

Actuator Applications

Thomson Electrak actuators can be found in the most diverse applications, ranging from agricultural to industrial, ventilation and medical equipment. Anywhere you want to lift, lower, push, pull, rotate or position a load - only your imagination will set the limit.

Mobile-off-highway
Actuators are widely used in agricultural, construction, mining, forestry, road work and railway equipment for the control of seats, hoods, doors, covers, balers, pantographs, sprayer booms, throttles and much more.

Turf and garden
Actuators can be found on riding lawn mowers, golf carts, garden tractors, cleaning machines, sky lifts and other utility vehicles.

Industrial equipment
Actuators are used on conveyor belts, for adjustable work tables/platforms and in the opening and closing of hatches, doors and locks. They are also common in machines for dispensing, cutting, packaging, labeling, scanning or printing.

Health and fitness
Actuators are commonly used in patient lifts/beds, handicap adapted vehicles and wheel chairs to position patients or equipment. Other applications include hospital devices, examination chairs/tables and work out/gym apparatus.

Office, domestic and entertainment equipment
At home, in the office and in the entertainment business actuators are used in automatic doors, lifts, garage doors, gates, satellite dishes, beds, reclining chairs, adjustable office desks, arcade games, vending machines, theatre/TV/movie props and theme park attractions.

Marine
On boats, ships and oil rigs actuators are used in seats, hatches, fire doors, rescue equipment, valves and throttles.

Ventilation and process control
Actuators are used for valve control in ventilation and process equipment.

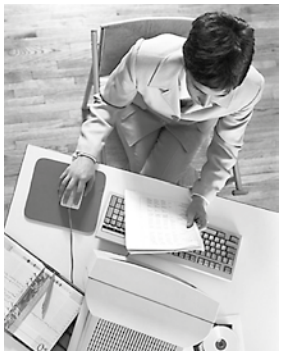

Introduction

Selection Procedure

Thomson actuators have been divided into good, better and best groups to help you select the appropiate actuator for your application. By using the simple selection procedure described below and the Performance Overview on the next few pages, the process will be even easier.

Good
These actuators are the lowest cost solution, provide capable, reliable performance and have some flexibility of options and configurations. If you just need a basic actuator, this is the best choice.

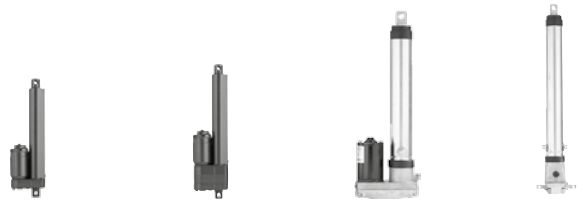

Better
These actuators have more flexibility in options, configurations and modifications. They have passed the test of time in the toughest agriculture and construction applications. Choose from this group if you need a rugged, heavy duty actuator customized to your application.

Best
These robust and strong actuators are the market leaders with state of the art technology and flexibility. They are smaller, lighter and have a shorter retracted length than other actuators on the market. If you need electronic load monitoring, programmable limit switches, digital feedback or signal following, this is the group for you.

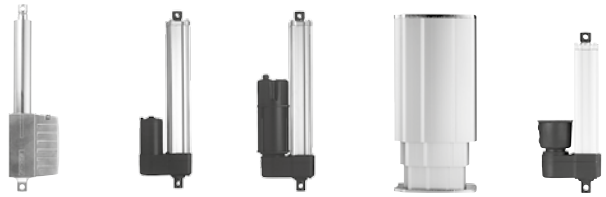

Selection procedure
Step 1 - Determine Voltage
DC actuators can be operated by battery, a rectifier or an actuator control with 230 Vac input. AC actuators are either 230 or 400 Vac.

Step 2 - Determine Load/Speed
Select the actuator which has the load and speed rating that suits your application.

Step 3 - Select Stroke Length
Choose the desired stroke length from either the Performance Overview pages or the individual product pages.

Step 4 - Verify Design Considerations
Do you need a very short retracted length, adjustable, fixed or programmable limit switches, electronic load monitoring, digital or analog feedback, low voltage power switching, manual override, signal following, clevis mounting, tube mounting or trunnion mounting? If you need an actuator to take side loads or cantilever loads, select from the TC16, DMD, DMA or LM80 actuators.

Step 5 - Select Control
The controls in the catalog are designed for use with Electrak actuators and range from a simple switch to a control with membrane switches and feedback display or with a hand pendant.

On-line selection software
On www.danahermotion.com/linear_actuator_advisor you can select an actuator by using the actuator product advisor. This easy to use software lets you play with all the parameters and will give you all the relevant data and the correct ordering information for your choice.

Can't find what you are looking for?
If you are an OEM customer and can't find exactly what you need, contact customer service at +46 (0)44 24 67 90 for a custom solution.

Performance Overview

Standard Actuator Range

	ELECTRAK					
	1	1SP	050	PPA-DC	10	LA14
Product availability						
North America / Europe / Asia [1]	•/•/•	•/•/•	•/•/•	•/•/•	•/•/•	/•/•
General performance						
Product group rating	good	good	better	good	better	best
Input voltage - Vdc / Vac [V]	12, 24, 36[2] /	12, 24, 36[2] /	12, 24, 36/	12, 24, 36, 90[3] /	12, 24, 36/	12, 24, 36 /
Maximum dynamic load [N]	340	340	500	6670	6800	6800
Maximum speed [mm/s]	75	75	48	33	60	60
Maximum stroke length [mm]	150	150	200	914	610	600
Restraining torque [Nm]	2,3	0	0	23	12	0
Protection class	IP65	IP65	IP56	IP52	IP65	IP65
Features						
Mounting configuration	clevis	clevis	clevis	trunnion	clevis	clevis/trunnion
Screw type - acme / worm / ball	•/ /	•/ /	/•/	/ /•	•[2]/ /•	•/ /•
Overload clutch			•	•	•	•
Motor overload protection	•	•	•	•	•	•
End of stroke limit switches	•		•			
Potentiometer feedback		•				
Electronic load monitoring						
Dynamic braking			•[7]			
Manual override						
Optional features						
End of stroke limit switches				•	•[3]	
Potentiometer feedback			•	•	•	•
Encoder feedback				•		
Programmable limit switches						
End of stroke indication outputs						
Low voltage power switching						
Signal follower input						
External adjustable magnetic sensors						•
Manual override				•[3]	•	•
More information						
See page[1]	14	16	18	20	22	24
Actuator Controls						
Recommended control	AC-247 ELS	AC-247 ELS	DCG-150	AC-063	AC-063	AC-063

[1] Products not available in this region are not further described in this catalog. Contact customer support for more information.
[2] Not available in North America.

				LIFTING COLUMNS			RODLESS			OTHER
	Pro	5	LA24	TC16	DMD	DMA	LM80-H	LM80-V	LM80-I	
										On the next pages you can find information on the following type of actuators: • Non-driven • Rotary • Legacy • Custom
	•/•/•	•/•/•	/•/•	•/•/•	•/•/•	•/•/•	•/•/•	•/•/•	•/•/•	
	best	better	best	best	better	better	better	better	better	
	12, 24 /	/ 115[3], 230, 400[2]	/ 230, 400	24 /	12, 24, 36 /	/ 115[3], 230, 400[2]	12, 24 /	12, 24 /	12, 24 /	
	4500	6800	6800	2000	6800	6800	2000[4]	2000[5]	2000[5]	
	51	60	60	19	60	60	110	110	110	
	300	610	600	400	610	610	1500	1500	1500	
	17 / 0[6]	12	0	0	0	0	0	0	0	
	IP66 (67)	IP45	IP45	IP44	IP65	IP45	IP44	IP44	IP44	
	clevis	clevis	clevis/trunnion	base mount	base mount	base mount	T-slot	T-slot	T-slot	
	•/ /•	•[2]/ /•	•/ /•	•[8]/ /	•/ /•	•/ /•	•[8]/ /•	•[8]/ /•		
		•	•		•	•				
	•	•	•		•	•				
				•						
	•									
	•			•						
	•									
		•[3]								
	•	•	•		•[2]	•[2]				
	•			•						
	•									
	•									
	•									
	•									
			•							
		•	•				•	•		
	26	28	30	32	34	36	38	40	42	
	AC-063	DPDT Switch	DPDT Switch	DCG-180	AC-063	DPDT Switch	DCG-170	DCG-160	DCG-160	

[3] Not available in Europe. [4] For horizontal operation only. [5] For vertical operation only. [6] Without / with anti-rotation option. [7] At end of stroke only. [8] Trapezoidal screw.

Performance Overview

Non-driven and Rotary Actuators

		PPA-M	FA14
Product availability			
North America / Europe / Asia [1]		• / • / •	/ • / •
General performance			
Product group rating		good	best
Max. input torque	[Nm]	9	1,8
Max. input speed	[rpm]	100	3000
Maximum dynamic load	[N]	6670	6800
Maximum speed	[mm/s]	8	37
Maximum stroke length	[mm]	914	600
Restraining torque	[Nm]	23	0
Standard features			
Mounting configuration		trunnion	clevis/trunnion
Screw type - acme / worm / ball		/ / •	• / / •
Overload clutch			•
Optional features			
Manual override			•
Protective bellows		•	
External adjustable magnetic sensors			•
More information			
See page[1]		44	46

[1] Products not available in this region are not further described in this catalog. Contact customer support for more information.

		ROTARY
		DGB
Product availability		
North America / Europe / Asia		• / / •
General performance		
Product group rating		better
Input voltage - Vdc / Vac	[V]	12, 24, 36 /
Maximum torque	[Nm]	20
Maximum speed	[rpm]	200
Maximum duty cycle	[%]	25
Protection class		IP56
Standard features		
Mounting configuration		clevis/tapped holes
Overload clutch		•
Motor overload protection		•
Optional features		
Dual ouput shafts		•
Manual override		•
More information		
See page[1]		–

[1] Products not available in this region are not further described in this catalog. Contact customer support for more information.

Performance Overview

Legacy Actuators

	ELECTRAK LEGACY ACTUATORS		
	1LL	150	100
Product availability			
North America / Europe / Asia	• / /	• / • / •	• / /
General performance			
Product group rating	good	better	better
Input voltage - Vdc / Vac [V]	12, 24 /	12, 24, 36 / 115[1]	24 /
Maximum dynamic load [N]	340	2000	6800
Maximum speed [mm/s]	76	71	48
Maximum stroke length [mm]	152	406	609
Restraining torque [Nm]	0	0	12
Protection class	IP65	IP56	IP65
Standard features			
Mounting configuration	clevis	clevis	tube
Screw type - acme / worm / ball	• / /	/ • /	/ / •
Overload clutch			
Motor overload protection		•	•
Potentiometer feedback			•
Fixed end of stroke limit switches	•		
Adjustable end of stroke limit switches			•
Internally restrained	•	•	
Optional features			
Adjustable end of stroke limit switches		•	
Potentiometer feedback		•	
Manual override			
External magnetic position sensors			

[1] Not available in Europe.

About Legacy Actuators

The legacy products will not be further described in this catalog. We recommend you choose one of the products on the preceding pages, especially when designing new equipment. However, the legacy actuators can still be purchased and we fully support them. Please contact customer support if you need more information.

About Custom Actuators

The actuators you see on these pages are some of the building blocks we use to create cost effective custom actuators for OEMs. If you can't find the actuator that meets your needs, call customer service at +46 (0) 44 24 67 90 for a custom solution. Thomson is the industry leader in custom actuator design.

Electrak 1

12, 24 and 36 Vdc - load up to 340 N

» Ordering Key - see page 68
» Glossary - see page 80
» Electric Wiring Diagram - see page 48

Standard Features and Benefits

- Very compact and lightweight
- Integrated end of stroke limit switches
- Corrosion resistant housing
- Self-locking acme screw drive system
- Maintenance free
- Ideal for replacement of comparable size pneumatic and hydraulic cylinders

General Specifications

Parameter	Electrak 1
Screw type	acme
Internally restrained	no
Manual override	no
Dynamic braking	no
Holding brake	no, self-locking
End of stroke protection	end of stroke limit switches
Mid stroke protection	no
Motor protection	auto reset thermal switch
Motor connection	flying leads and connector
Motor connector	Packard Electric Pack-Con male 8911773 with terminal 6294511. Mating connector: 8911772 with terminal 8911639 (p/n 9300-448-001)
Certificates	CE
Options	none

Performance Specifications

Parameter		Electrak 1
Maximum load, dynamic / static	[N]	
S • • -09A04		110 / 1300
S • • -09A08		225 / 1300
S • • -17A08		340 / 1300
S • • -17A16		340 / 1300
Speed, at no load / at maximum load	[mm/s]	
S • • -09A04		75 / 52
S • • -09A08		45 / 33
S • • -17A08		26 / 17
S • • -17A16		14 / 7
Available input voltages	[Vdc]	12, 24, 36
Standard stroke lengths	[inch]	1, 2, 3, 4, 5, 6
Operating temperature limits	[°C]	-25 – +65
Full load duty cycle @ 25 °C	[%]	25
End play, maximum	[mm]	0,9
Restraining torque	[Nm]	2,3
Lead cross section	[mm^2]	1
Lead length	[mm]	110
Protection class		IP65

Compatible Controls

Control model	See page
DPDT switch	53
AC-247 ELS	56
DCG-150	58

Electrak 1

12, 24 and 36 Vdc - load up to 340 N

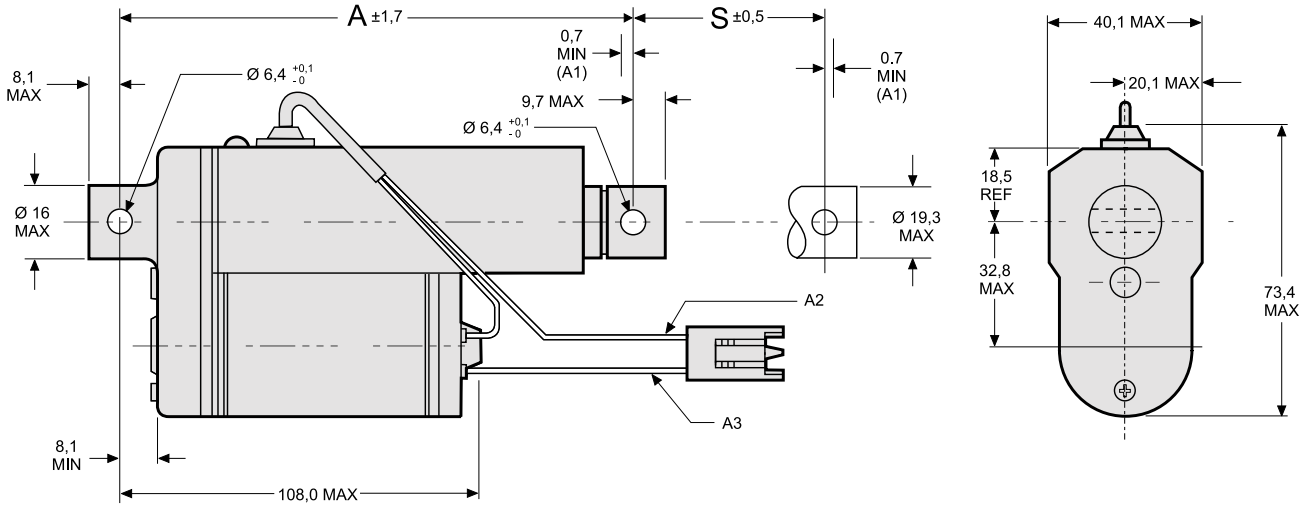

S: stroke
A: retracted length
A1: installation must include at least this much coast beyond limit switch shut off

A2: red lead
A3: yellow lead

Ordering stroke	[inch]	1	2	3	4	5	6
Electrical stroke (S) *	[mm (inch)]	20,8 (0,82)	46,2 (1,82)	71,6 (2,82)	97,0 (3,82)	122,4 (4,82)	147,8 (5,82)
Retracted length (A)	[mm]	134,5	159,9	185,3	210,7	236,1	261,5
Weight	[kg]	0,52	0,54	0,60	0,63	0,66	0,68

* The electrical stroke is the stroke when the internal limit switches switch off the power to the motor. The installation then must allow the extension tube to coast at least 0,7 mm beyond that position before it becomes mechanically blocked to travel any further (distance A1). If there is no mechanical block the extension tube coasting distance will depend on the load, no load means the longest coasting distance while the distance becomes shorter as the load becomes higher. The exact coasting distance depends on the load, in which direction the load acts (push or pull), the mounting orientation of the actuator and any added friction to the system by guides or other installations and has to be determined on a case to case basis.

Performance Diagrams

Speed and Current vs. Load 12 Vdc

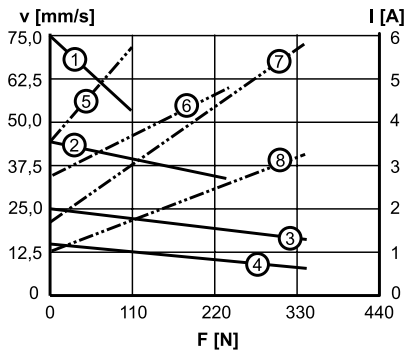

V: speed I: current F: load

1: speed S12-09A04
2: speed S12-09A08
3: speed S12-17A08
4: speed S12-17A16
5: current S12-09A04
6: current S12-09A08
7: current S12-17A08
8: current S12-17A16

Speed and Current vs. Load 24 Vdc

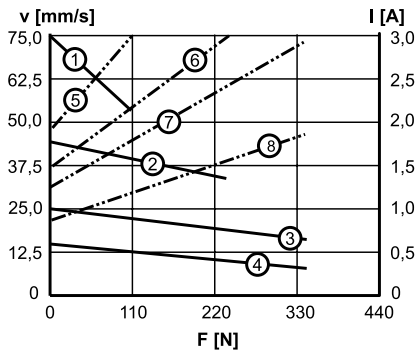

V: speed I: current F: load

1: speed S24-09A04
2: speed S24-09A08
3: speed S24 -17A08
4: speed S24-17A16
5: current S24-09A04
6: current S24-09A08
7: current S24-17A08
8: current S24-17A16

Speed and Current vs. Load 36 Vdc

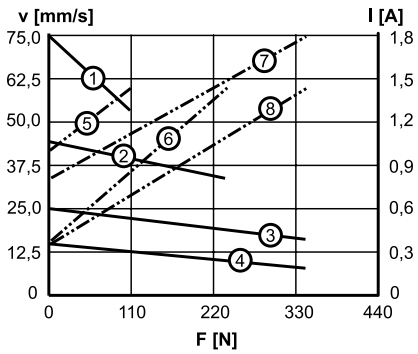

V: speed I: current F: load

1: speed S36-09A04
2: speed S36-09A08
3: speed S36-17A08
4: speed S36-17A16
5: current S36-09A04
6: current S36-09A08
7: current S36-17A08
8: current S36-17A16

Electrak 1SP

12, 24 and 36 Vdc - load up to 340 N

» Ordering Key - see page 68
» Glossary - see page 80
» Electric Wiring Diagram - see page 49

Standard Features and Benefits

- Very compact and lightweight
- Potentiometer feedback
- Corrosion resistant housing
- Self-locking acme screw drive system
- Maintenance free
- Internally restrained extension tube
- Ideal for replacement of comparable size pneumatic and hydraulic cylinders

General Specifications

Parameter	Electrak 1SP
Screw type	acme
Internally restrained	yes
Manual override	no
Dynamic braking	no
Holding brake	no, self-locking
End of stroke protection	no
Mid stroke protection	no
Motor protection	auto reset thermal switch
Motor connection	flying leads and connector
Motor connector	Packard Electric Pack-Con male 8911773 with terminal 6294511. Mating connector: 8911772 with terminal 8911639 (p/n 9300-448-001)
Certificates	CE
Options	none

Performance Specifications

Parameter		Electrak 1SP
Maximum load, dynamic / static	[N]	
SP • • -09A04		110 / 1300
SP • • -09A08		225 / 1300
SP • • -17A08		340 / 1300
SP • • -17A16		340 / 1300
Speed, at no load / at maximum load	[mm/s]	
SP • • -09A04		75 / 52
SP • • -09A08		45 / 33
SP • • -17A08		26 / 17
SP • • -17A16		14 / 7
Available input voltages	[Vdc]	12, 24, 36
Standard stroke lengths	[inch]	2, 4, 6*
Operating temperature limits	[°C]	-25 – +65
Full load duty cycle @ 25 °C	[%]	25
End play, maximum	[mm]	0,9
Restraining torque	[Nm]	0
Lead cross section	[mm²]	1
Lead length	[mm]	110
Protection class		IP65
Potentiometer	[kOhm]	10**

* Six inch stroke lenght not possible for SP • • -17A16.
** See table on page 17 for resistance change per mm.

Compatible Controls

Control model	See page
DPDT switch	53
AC-247 ELS	56
DCG-150	58

Electrak 1SP

12, 24 and 36 Vdc - load up to 340 N

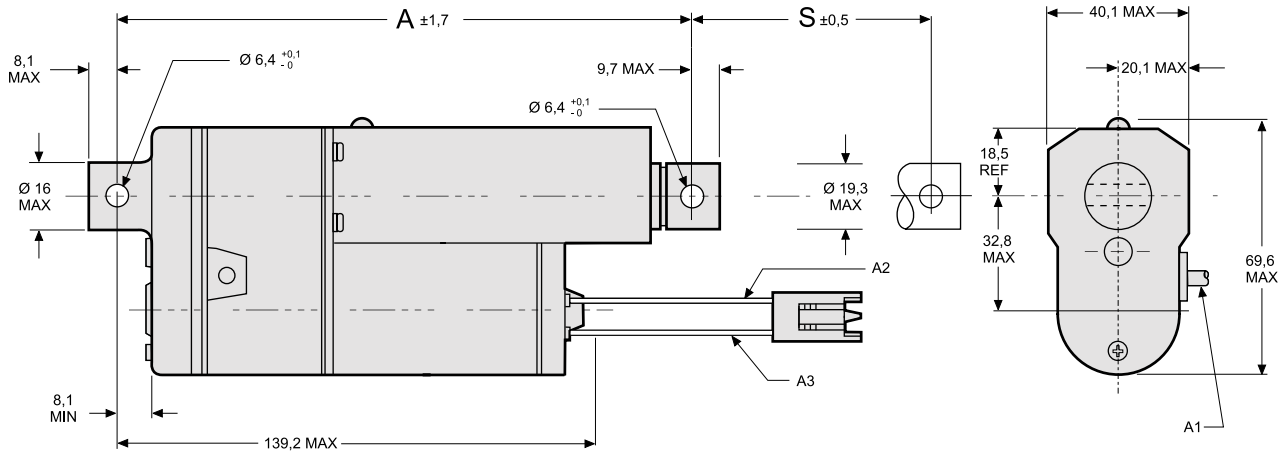

S: stroke
A: retracted length
A1: cable for potentiometer feedback, length = 635 mm

A2: black lead for 12 Vdc units, white lead for 24 Vdc units, blue lead for 36 Vdc
A3: yellow lead

Ordering stroke	[inch]	2	4	6*
Actual stroke (S)	[mm (inch)]	58,7 (2,31)	115,1 (4,53)	171,5 (6,75)
Retracted length (A)	[mm]	197,9	254,3	310,7
Weight	[kg]	0,8	0,85	0,9
Potentiometer resistance change	[ohm/mm]	94	47 (63)**	31

* Six inch stroke lenght not possible for SP • • -17A16. ** SP • • -17A16 with 4 inch stroke = 63 ohm/mm, all other stroke lengths has 47 ohm/mm.

Performance Diagrams

Speed and Current vs. Load 12 Vdc

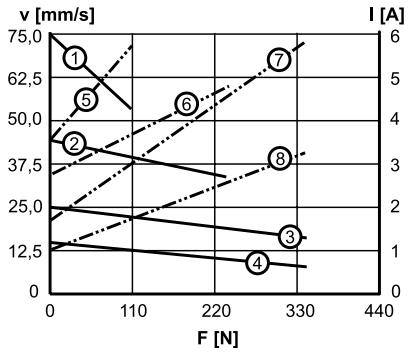

V: speed I: current F: load

1: speed SP12-09A04
2: speed SP12-09A08
3: speed SP12-17A08
4: speed SP12-17A16
5: current SP12-09A04
6: current SP12-09A08
7: current SP12-17A08
8: current SP12-17A16

Speed and Current vs. Load 24 Vdc

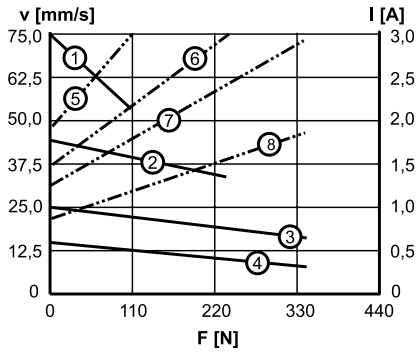

V: speed I: current F: load

1: speed SP24-09A04
2: speed SP24-09A08
3: speed SP24-17A08
4: speed SP24-17A16
5: current SP24-09A04
6: current SP24-09A08
7: current SP24-17A08
8: current SP24-17A16

Speed and Current vs. Load 36 Vdc

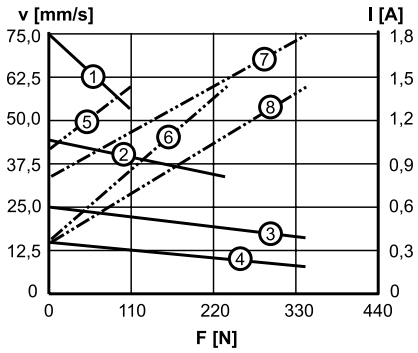

V: speed I: current F: load

1: speed SP36-09A04
2: speed SP36-09A08
3: speed SP36-17A08
4: speed SP36-17A16
5: current SP36-09A04
6: current SP36-09A08
7: current SP36-17A08
8: current SP36-17A16

Electrak 050

12, 24 and 36 Vdc - load up to 510 N

» Ordering Key - see page 69
» Glossary - see page 80
» Electric Wiring Diagram - see page 48

Standard Features and Benefits

- Designed for office or medical applications
- Small, quiet and lightweight
- Very short retracted length
- Low cost
- Durable and corrosion free plastic housing
- Color molded into the plastic, no painting required
- End of stroke limit switches with dynamic braking
- Maintenance free
- Internally restrained extension tube
- Estimated life is minimum 40000 cycles
- Q-version for noise sensitive applications

General Specifications

Parameter	Electrak 050
Screw type	worm
Internally restrained	yes
Manual override	no
Dynamic braking	yes, at end of stroke
Holding brake	no, self-locking
End of stroke protection	internal limit switches
Mid stroke protection	overload clutch
Motor protection	auto reset thermal switch
Motor connection	flying leads
Motor connector	no
Certificates	CE
Options	• potentiometer 10 kOhm* • cross holes rotated 90° • white housing

* See performance specification table for resistance change per mm of travel.

Performance Specifications

Parameter		Electrak 050
Maximum load, dynamic / static	[N]	
DE • • • 17W41		510 / 1020
DE • • • 17W42		275 / 550
DE • • • 17W44		140 / 280
Speed, at no load / at maximum load	[mm/s]	
DE • • - 17W41		12 / 9
DE • • - 17W42		24 / 18
DE • • - 17W44		48 / 37
DE • • Q17W41		9 / 7,5
DE • • Q17W42		18 / 14
DE • • Q17W44		38 / 30
Available input voltages	[Vdc]	
DE • • -		12, 24, 36
DE • • Q		24
Standard stroke lengths	[mm]	25, 50, 75, 100, 125, 150, 175, 200
Operating temperature limits	[°C]	-30 – +80
Full load duty cycle @ 20 °C	[%]	25
End play, maximum	[mm]	1,5
Restraining torque	[Nm]	0
Lead cross section	[mm²]	1
Lead length	[mm]	500
Protection class		
DE • • -		IP56
DE • • Q		IP51
Potentiometer resistance change	[ohm/mm]	
DE • • • 17W41		22,0
DE • • • 17W42		21,9
DE • • • 17W44		21,2

Compatible Controls

Control model	See page
DPDT switch	53
DCG-150	58
AC-247 ELS	56

Electrak 050

12, 24 and 36 Vdc - load up to 510 N

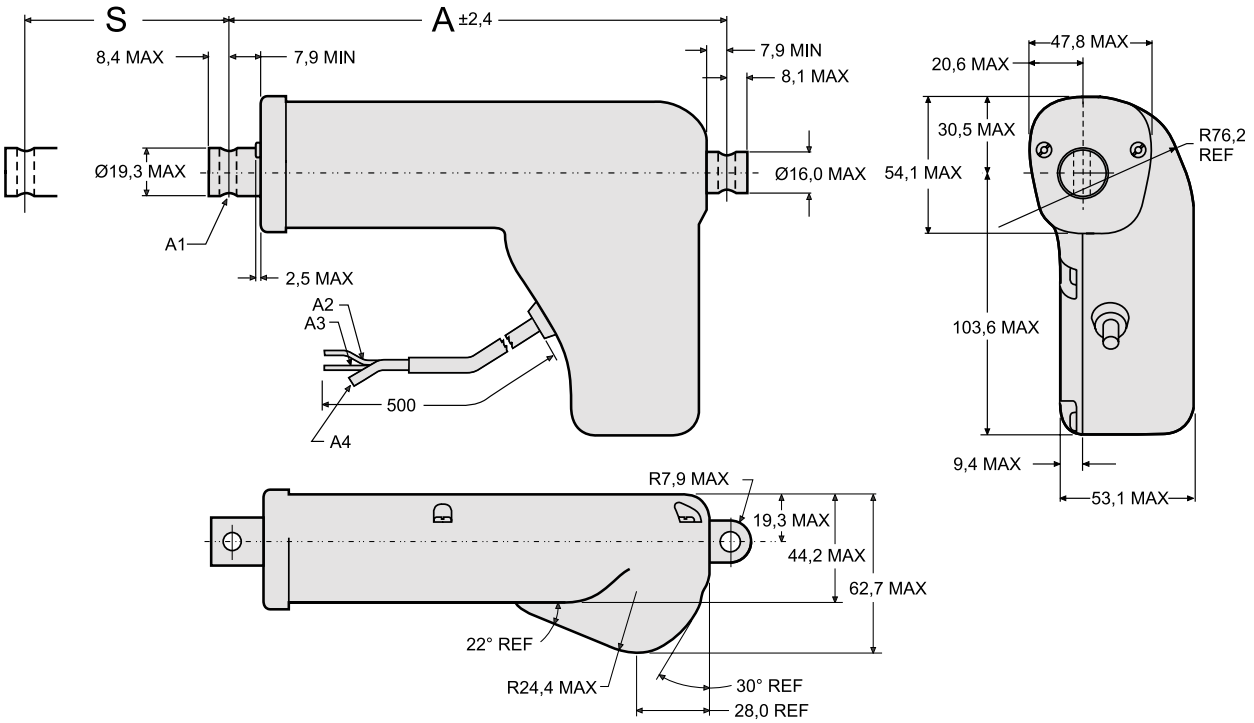

S: stroke (tolerances: 17W41 = ± 3,23 mm, 17W42 = ± 4,25 mm, 17W44 = ± 5,26 mm)
A: retracted length
A1: Ø 6 mm +0,15/ -0 mounting cross holes (2 ×) in standard position
A2: red lead
A3: yellow lead
A4: vent tube Ø 3 mm

Stroke (S)	[mm]	25	50	75	100	125	150	175	200
Retracted length (A)	[mm]	114,2	139,2	164,2	189,2	214,2	239,2	264,2	289,2
Retracted length, with potentiometer (A)	[mm]	145,7	170,7	195,7	220,7	245,7	270,7	295,7	- *
Weight	[kg]	0,59	0,64	0,69	0,73	0,78	0,82	0,87	0,91
Weight with potentiometer	[kg]	0,69	0,74	0,79	0,83	0,88	0,92	0,97	- *

* 200 mm stroke not possible with potentiometer (PO, MP, PF options)

Performance Diagrams

050, standard version
Speed and Current vs. Load

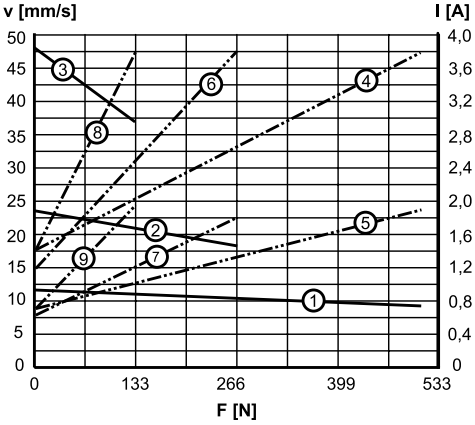

050, Q-version
Speed and Current vs. Load

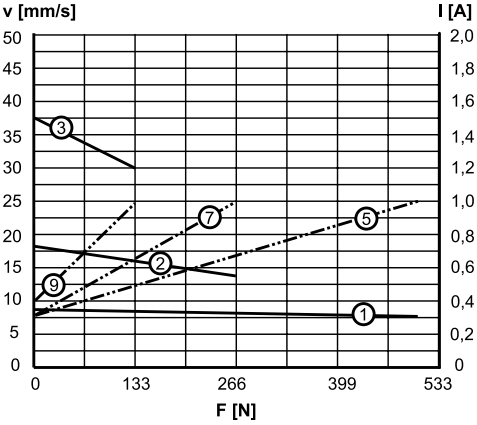

V: speed I: current F: load
1: speed DE • • • 17W41
2: speed DE • • • 17W42
3: speed DE • • • 17W44
4: current 12 Vdc, DE12 - 17W41
5: current 24 Vdc, DE24 • 17W41
6: current 12 Vdc, DE12 - 17W42
7: current 24 Vdc, DE24 • 17W42
8: current 12 Vdc, DE12 - 17W44
9: current 24 Vdc, DE24 • 17W44

Electrak PPA-DC

12, 24 and 36 Vdc - load up to 6670 N

» Ordering Key - see page 69
» Glossary - see page 80
» Electric Wiring Diagram - see page 49

Standard Features and Benefits

- Strong and versatile heavy duty actuator
- High duty cycle
- Highly efficient ball screw drive system
- Overload clutch for mid and end of stroke protection
- Stroke lengths up to 36 inch (914 mm)
- Three different input voltages to choose from
- Motor with thermal switch
- Maintenance free
- Large range of options

General Specifications

Parameter	Electrak PPA-DC
Screw type	ball
Internally restrained	no
Manual override	no, optional
Dynamic braking	no
Holding brake	yes
End of stroke protection	overload clutch
Mid stroke protection	overload clutch
Motor protection	auto reset thermal switch
Motor connection	flying leads
Motor connector	no
Certificates	CE
Options	• end of stroke limit switches • potentiometer • encoder • protective bellows

Performance Specifications

Parameter		PPA-DC
Maximum load, dynamic / static PPA • • -18B65 PPA • • -58B65	[N]	 3330 / 13350 6670 / 13350
Speed, at no load / at maximum load PPA12(24/36)-18B65 PPA12(24/36)-58B65	[mm/s]	 32 / 28 12 / 9
Available input voltages	[Vdc]	12, 24, 36
Standard stroke lengths	[inch]	4, 8, 12, 18, 24, 36
Operating temperature limits	[°C]	-25 – +65
Full load duty cycle @ 25 °C	[%]	30
End play, maximum	[mm]	1
Restraining torque PPA • • -18B65 PPA • • -58B65	[Nm]	 11 22
Lead cross section	[mm²]	2
Lead length	[mm]	420
Protection class		IP52

Compatible Controls

Control model	See page
DPDT switch	53
AC-063	54
DCG-190	58

Electrak PPA-DC

12, 24 and 36 Vdc - load up to 6670 N

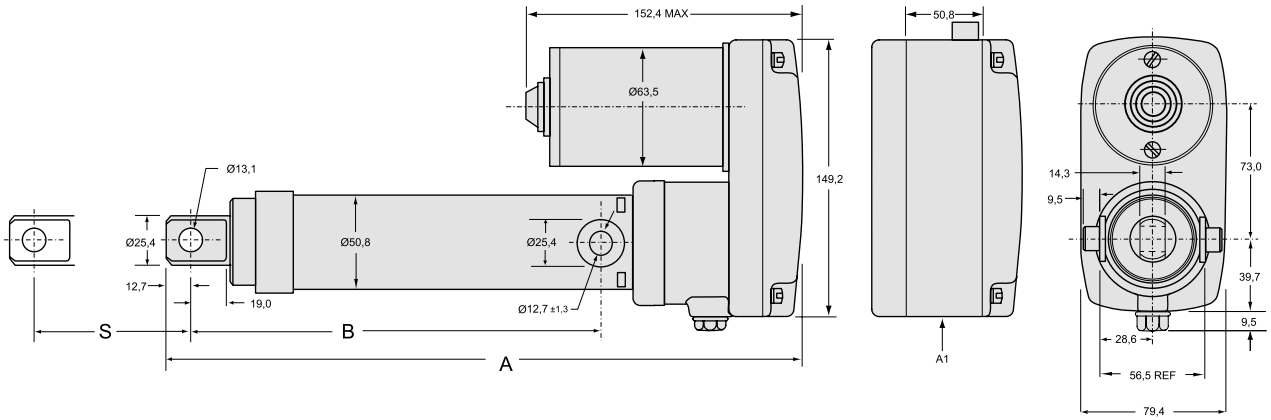

S: stroke
A: retracted length

B: retracted length to trunnions
A1: housing dimensions for limit switch, encoder or potentiometer options

Stroke (S)	[inch (mm)]	4 (101,6)	8 (203,2)	12 (304,8)	18 (457,2)	24 (609,6)	36 (914,4)
Retracted length (A) without options	[mm]	348,0	449,6	551,2	754,4	906,8	1211,6
Retracted length (A) with limit switch, encoder or potentiometer	[mm]	398,8	500,4	602,0	805,2	957,6	1262,4
Retracted length to trunnions (B)	[mm]	223,5	352,1	426,7	629,9	782,3	1087,1
Weight	[kg]	4,5	5,3	6,0	7,2	8,4	10,8
Add on weight for limit switch, encoder or potentiometer	[kg]	0,5	0,5	0,5	0,5	0,5	0,5

Performance Diagrams

Speed and Current vs. Load

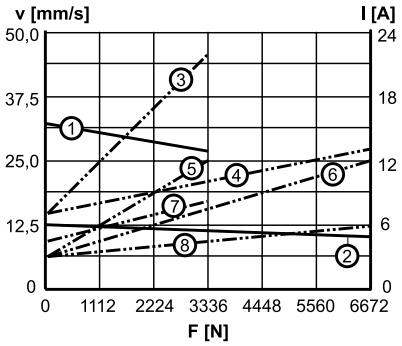

V: speed I: current F: load

1: speed PPA • • -18B65
2: speed PPA • • -58B65
3: current 12 Vdc, PPA12-18B65
4: current 12 Vdc, PPA12-58B65
5: current 24 Vdc, PPA24-18B65
6: current 24 Vdc, PPA24-58B65
7: current 36 Vdc, PPA36-18B65
8: current 36 Vdc, PPA36-58B65

Electrak 10

12, 24 and 36 Vdc - load up to 6800 N

» Ordering Key - see page 70
» Glossary - see page 80
» Electric Wiring Diagram - see page 48

Standard Features and Benefits

- Robust, strong and reliable
- Withstands very harsh environments
- Stainless steel extension tube
- Acme or ball screw models
- Overload clutch for mid and end of stroke protection
- Motor with thermal switch
- Maintenance free

General Specifications

Parameter	Electrak 10
Screw type	acme or ball
Internally restrained	no
Manual override	no, optional
Dynamic braking	no
Holding brake acme screw models ball screw models	 no, self-locking yes
End of stroke protection	overload clutch
Mid stroke protection	overload clutch
Motor protection	auto reset thermal switch
Motor connection	flying leads and connector
Motor connector	AMP connector with housing p/n 180908-5 with male terminals p/n 42098-2
Certificates	CE
Options	• potentiometer • manual override

Performance Specifications

Parameter		Electrak 10
Maximum load, dynamic / static	[N]	
D • • -05A5 (acme screw)		1100 / 11350
D • • -10A5 (acme screw)		2250 / 11350
D • • -20A5 (acme screw)		2250 / 11350
D • • -05B5 (ball screw)		2250 / 18000
D • • -10B5 (ball screw)		4500 / 18000
D • • -20B5 (ball screw)		4500 / 18000
D • • -21B5 (ball screw)		6800 / 18000
Speed, at no load / at maximum load	[mm/s]	
D • • -05A5 (acme screw)		54 / 32
D • • -10A5 (acme screw)		30 / 18
D • • -20A5 (acme screw)		15 / 12
D • • -05B5 (ball screw)		61 / 37
D • • -10B5 (ball screw)		30 / 19
D • • -20B5 (ball screw)		15 / 12
D • • -21B5 (ball screw)		15 / 11
Available input voltages	[Vdc]	12, 24, 36 *
Standard stroke lengths	[inch]	4, 6, 8, 10, 12, 14, 16, 18, 20, 24
Operating temperature limits	[°C]	-25 – +65
Full load duty cycle @ 25 °C	[%]	25
End play, maximum	[mm]	1,0
Restraining torque	[Nm]	11,3
Lead cross section	[mm^2]	2
Lead length	[mm]	165
Protection class		IP65

* Other input voltages available on request, contact customer support.

Compatible Controls

Control model	See page
DPDT switch	53
AC-063	54
DCG-190	58

Electrak 10

12, 24 and 36 Vdc - load up to 6800 N

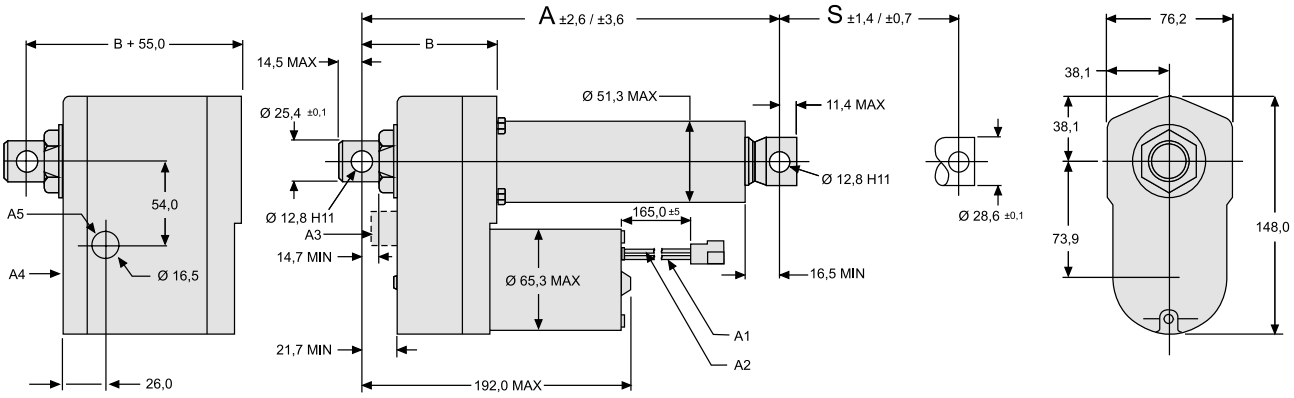

S: stroke, tolerance acme / ball screw
A: retracted length, tolerance acme / ball screw
A1: black lead
A2: red lead
A3: manual override input (optional)
A4: housing dimensions for potentiometer option
A5: potentiometer cable output, cable length = min. 500 mm
B: 86,1 mm

Stroke (S)	[inch (mm)]	4 (101,6)	6 (152,4)	8 (203,2)	10 (254,0)	12 (304,8)	14 (355,6)	16 (406,4)	18 (457,2)	20 (508,0)	24 (609,6)
Retracted length, acme screw models (A)	**[mm]**	262,3	313,1	363,9	414,7	465,5	567,1	617,9	668,7	719,5	821,1
Retracted length, ball screw models (A)	**[mm]**	302,3	353,1	403,9	454,7	505,5	607,1	657,9	708,7	759,5	861,1
Add on length for potentiometer*	**[mm]**	55,0	55,0	55,0	55,0	55,0	55,0	55,0	55,0	55,0	55,0
Weight, acme screw models	**[kg]**	4,5	4,7	4,9	5,0	5,2	5,4	5,5	5,7	5,8	6,2
Weight, ball screw models	**[kg]**	5,1	5,3	5,5	5,6	5,8	5,9	6,1	6,3	6,4	6,8
Add on weight for potentiometer*	**[kg]**	1,3	1,3	1,3	1,3	1,3	1,3	1,3	1,3	1,3	1,3
Potentiometer resistance change*	**[ohm/mm]**	39	39	39	39	20	20	20	20	20	10

* Potentiometer is optional

Performance Diagrams

Acme Screw Models
Speed and Current vs. Load

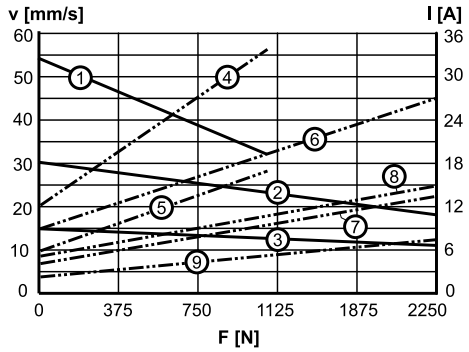

V: speed
I: current
F: load

1: speed D • • -05A5
2: speed D • • -10A5
3: speed D • • -20A5

4. current 12 Vdc, D12-05A5
5: current 24 Vdc, D24-05A5
6: current 12 Vdc, D12-10A5
7: current 24 Vdc, D24-10A5
8: current 12 Vdc, D12-20A5
9: current 24 Vdc, D24-20A5

Ball Screw Models
Speed and Current vs. Load

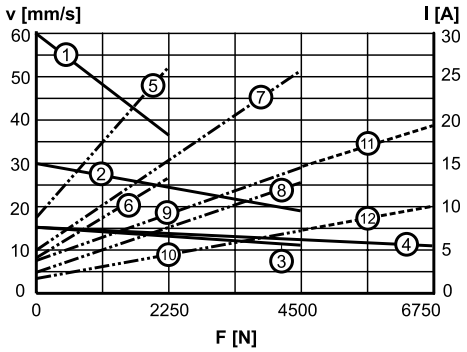

V: speed
I: current
F: load

1: speed D • • -05B5
2: speed D • • -10B5
3: speed D • • -20B5
4: speed D • • -21B5

5. current 12 Vdc, D12-05B5
6: current 24 Vdc, D24-05B5
7: current 12 Vdc, D12-10B5
8: current 24 Vdc, D24-10B5
9: current 12 Vdc, D12-20B5
10: current 24 Vdc, D24-20B5
11: current 12 Vdc, D12-21B5
12: current 24 Vdc, D24-21B5

Electrak LA14

12, 24 and 36 Vdc - load up to 6800 N

» Ordering Key - see page 71
» Glossary - see page 80
» Electric Wiring Diagram - see page 48

Standard Features and Benefits

- Rugged and robust
- Withstands very harsh environments
- Stainless steel extension tube
- Corrosion free aluminium cover tube
- Acme or ball screw drive
- Trunnion mounting possible
- Overload clutch for mid and end of stroke protection
- T-slot grooves in the cover tube for magnetic sensors
- Motor with thermal switch
- Maintenance free

General Specifications

Parameter	Electrak LA14
Screw type	acme or ball
Internally restrained	yes
Manual override	no, optional
Dynamic braking	no
Holding brake acme screw models ball screw models	 no, self-locking yes
End of stroke protection	overload clutch
Mid stroke protection	overload clutch
Motor protection	auto reset thermal switch
Motor connection	flying leads and connector
Motor connector	AMP connector with housing p/n 180908-5 with male terminals p/n 42098-2
Certificates	CE
Options	• potentiometer • manual override

Performance Specifications

Parameter		Electrak LA14
Maximum load, dynamic / static	[N]	
DA • • -05A65M (acme screw)		1100 / 11350
DA • • -10A65M (acme screw)		2250 / 11350
DA • • -20A65M (acme screw)		2250 / 11350
DA • • -05B65M (ball screw)		2250 / 18000
DA • • -10B65M (ball screw)		4500 / 18000
DA • • -20B65M (ball screw)		4500 / 18000
DA • • -21B65M (ball screw)		6800 / 18000
Speed, at no load / at maximum load	[mm/s]	
DA • • -05A65M (acme screw)		54 / 32
DA • • -10A65M (acme screw)		30 / 18
DA • • -20A65M (acme screw)		15 / 12
DA • • -05B65M (ball screw)		61 / 37
DA • • -10B65M (ball screw)		30 / 19
DA • • -20B65M (ball screw)		15 / 12
DA • • -21B65M (ball screw)		15 / 11
Available input voltages	[Vdc]	12, 24, 36 *
Standard stroke lengths	[mm]	50, 100, 150, 200, 250, 300, 350, 400, 450, 500, 550, 600
Operating temperature limits	[°C]	-25 – +65
Full load duty cycle @ 25 °C	[%]	25
End play, maximum	[mm]	1,0
Restraining torque	[Nm]	0
Lead cross section	[mm²]	2
Lead length	[mm]	165
Protection class		IP65

* Other input voltages available on request, contact customer support.

Compatible Controls

Control model	See page
DPDT switch	53
AC-063	54
DCG-190	58

Electrak LA14

12, 24 and 36 Vdc - load up to 6800 N

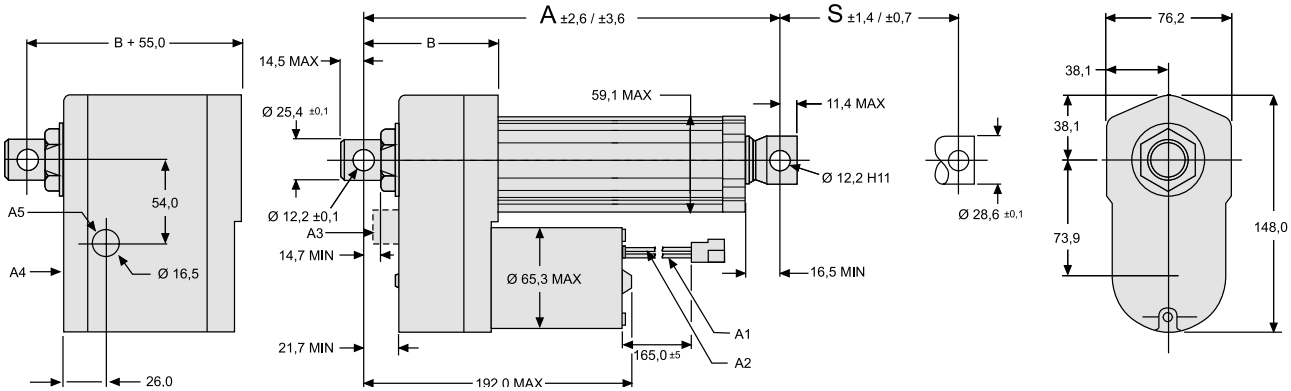

S: stroke, tolerance acme / ball screw
A: retracted length, tolerance acme / ball screw
A1: black lead
A2: red lead
A3: manual override input (optional)
A4: housing dimensions for potentiometer option
A5: potentiometer cable output, cable length = min. 500 mm
B: 86,1 mm

Stroke (S)	[mm]	50	100	150	200	250	300	350	400	450	500	550	600
Retracted length, acme screw models (A)	[mm]	216,7	266,7	316,7	366,7	416,7	466,7	566,7	616,7	666,7	716,7	766,7	816,7
Retracted length, ball screw models (A)	[mm]	269,6	319,6	369,6	419,6	469,6	519,6	619,6	669,6	719,6	769,6	819,6	869,6
Add on length for potentiometer*	[mm]	55,0	55,0	55,0	55,0	55,0	55,0	55,0	55,0	55,0	55,0	55,0	55,0
Weight, acme screw models	[kg]	4,5	4,7	4,9	5,1	5,3	5,5	5,8	6,0	6,2	6,4	6,6	6,8
Weight, ball screw models	[kg]	5,3	5,5	5,7	5,9	6,1	6,3	6,6	6,8	7,0	7,2	7,4	7,6
Add on weight for potentiometer*	[kg]	1,3	1,3	1,3	1,3	1,3	1,3	1,3	1,3	1,3	1,3	1,3	1,3
Potentiometer resistance change*	[ohm/mm]	39	39	39	39	39	20	20	20	20	20	10	10

* Potentiometer is optional

Performance Diagrams

Acme Screw Models
Speed and Current vs. Load

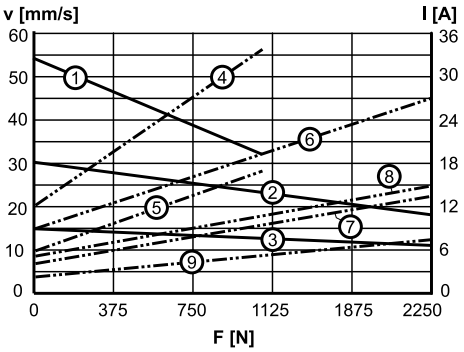

V: speed
I: current
F: load

1: speed DA • • -05A65M
2: speed DA • • -10A65M
3: speed DA • • -20A65M
4. current 12 Vdc, DA12-05A65M
5: current 24 Vdc, DA24-05A65M
6: current 12 Vdc, DA12-10A65M
7: current 24 Vdc, DA24-10A65M
8: current 12 Vdc, DA12-20A65M
9: current 24 Vdc, DA24-20A65M

Ball Screw Models
Speed and Current vs. Load

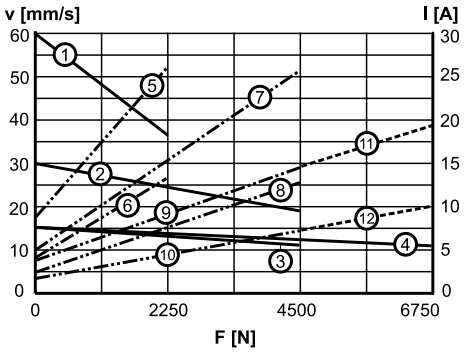

V: speed
I: current
F: load

1: speed DA • • -05B65M
2: speed DA • • -10B65M
3: speed DA • • -20B65M
4: speed DA • • -21B65M
5. current 12 Vdc, DA12-05B65M
6: current 24 Vdc, DA24-05B65M
7: current 12 Vdc, DA12-10B65M
8: current 24 Vdc, DA24-10B65M
9: current 12 Vdc, DA12-20B65M
10: current 24 Vdc, DA24-20B65M
11: current 12 Vdc, DA12-21B65M
12: current 24 Vdc, DA24-21B65M

Electrak Pro

12 and 24 Vdc - load up to 4500 N

» Ordering Key - see page 72
» Glossary - see page 80
» Electric Wiring Diagram - see page 48

Standard Features and Benefits

- Designed for heavy duty operation, IP66 (67) protection
- Optimized overall envelope with minimal retracted length
- Durable and corrosion resistant aluminum housing
- Cover tube and extension tube in stainless steel[2/4/5]
- Acme or ball screw models
- Maintenance free
- Electronic load monitoring (ELM)
- Manual override
- Wide range of options

General Specifications

Parameter	Electrak Pro
Screw type	acme or ball
Internally restrained	no / yes[1]
Manual override	yes
Dynamic braking	yes
Holding brake acme screw models ball screw models	 no, self-locking yes
End of stroke protection	electronic load monitoring
Mid stroke protection	electronic load monitoring
Motor protection	electronic load monitoring
Motor connection	connector integrated in housing
Motor connector	Delphi Metri-Pack 280
Certificates	CE
Options	• linear potentiometer[1/2] • low current power switching • signal follower input[1/2/] • programmable limit switches[1/2] • end of stroke indication outputs[1/2] • ELM trip indication output • encoder [5] • IP67[3] • black paint

Performance Specifications

Parameter		Electrak Pro
Maximum load, dynamic / static	[N]	
PR • • 02-2A65 (acme screw)		1125 / 2250
PR • • 05-4A65 (acme screw)		2250 / 4500
PR • • 07-8A65 (acme screw)		3375 / 6750
PR • • 05-2B65 (ball screw)		2250 / 4500
PR • • 10-4B65 (ball screw)		4500 / 9000
Speed, at no load / at maximum load	[mm/s]	
PR • • 02-2A65 (acme screw)		50 / 43
PR • • 05-4A65 (acme screw)		28 / 23
PR • • 07-8A65 (acme screw)		14 / 12
PR • • 05-2B65 (ball screw)		50 / 38
PR • • 10-4B65 (ball screw)		25 / 20
Available input voltages [6]	[Vdc]	12, 24
Standard stroke lengths [4]	[mm]	50, 100, 150, 200, 300
Operating temperature limits	[°C]	-40 – + 85
Full load duty cycle @ 25 °C	[%]	25
End play, maximum	[mm]	1,0
Restraining torque, maximum	[Nm]	17 / 0[1]
Protection class		IP66 (67)[3]

Compatible Controls [7]

Control model	See page
DPDT switch	53
AC-063	54

[1] Without / with anti-rotation option. When the anti-rotation option is being used, the front adapter cross hole can't be freely rotated. Instead the front cross hole must be ordered in standard postion (shown in the drawing) or rotated 90°.

[2] Control options with linear potentiometer (options "L", "P", "R" and "K") requires an aluminum cover tube. Also the anti-rotation option requires an aluminum cover tube. Anti-rotation is required for ball screw units with above options, but optional for acme screw units. Note that a programming unit is neccessary for the programmable limit switch option, see page 66.

[3] IP67 requires the mating connector be installed and the factory sealing, including the manual override cover, must not be compromised.

[4] For longer stroke length, contact customer support.

[5] Consult customer support for encoder output data.

[6] Electrak Pro requires, besides the correct input voltage, at least a 600 W power supply or an automotive/marine battery to function properly.

Electrak Pro

12 and 24 Vdc - load up to 4500 N

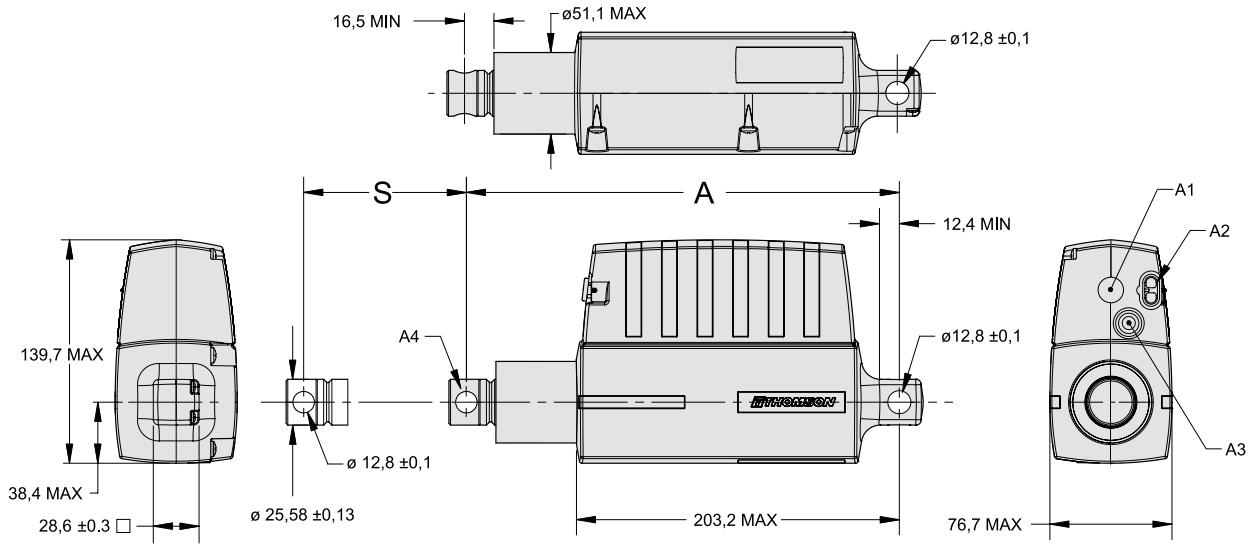

S: stroke
A: retracted length
A1: manual override cover (manual override requires 5 mm or 3/16 hexagon key to operate)
A2: motor connector
A3: knock out plug for signal wire exit
A4: plated steel front adapter cross hole shown in standard position

Stroke (S)	[mm]	50	100	150	200	300
Retracted length, acme screw models (A)	[mm]	240,3	257,5	307,5	357,5	457,5
Retracted length, ball screw models (A)	[mm]	240,3	289,5	339,5	389,5	489,5
Weight, acme screw models	[kg]	2,9	3,0	3,2	3,4	3,9
Weight, ball screw models	[kg]	3,3	3,4	3,6	3,8	4,1
Potentiometer approx. resistance change*	[ohm/mm]	57.2	36,2	26,5	41,7	29,3
Potentiometer total resistance	[kohm]	5	5	5	10	10

* Potentiometer is optional

Performance Diagrams

Acme Screw Models
Speed and Current vs. Load

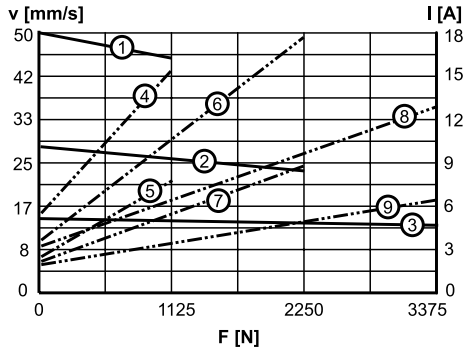

V: speed
I: current
F: load

1: speed PR • • 02-2A65
2: speed PR • • 05-4A65
3: speed PR • • 07-8A65
4. current 12 Vdc, PR1202-2A65
5: current 24 Vdc, PR2402-2A65
6: current 12 Vdc, PR1205-4A65
7: current 24 Vdc, PR2405-4A65
8: current 12 Vdc, PR1207-8A65
9: current 24 Vdc, PR2407-8A65

Ball Screw Models
Speed and Current vs. Load

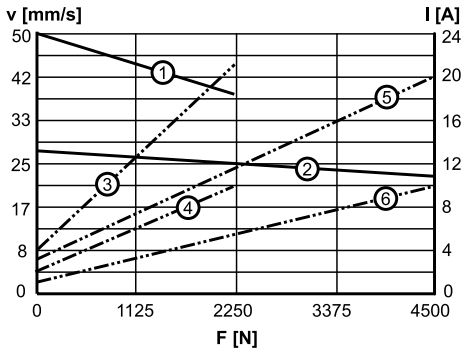

V: speed
I: current
F: load

1: speed PR • • 05-2B65
2: speed PR • • 10-4B65
3. current 12 Vdc, PR1205-2B65
4: current 24 Vdc, PR2405-2B65
5: current 12 Vdc, PR1210-4B65
6: current 24 Vdc, PR2410-4B65

Electrak 5

230 and 400 Vac - load up to 6800 N

» Ordering Key - see page 73
» Glossary - see page 80
» Electric Wiring Diagram - see page 50

Standard Features and Benefits

- Robust, strong and reliable
- Stainless steel extension tube
- Acme or ball screw models
- Overload clutch for mid and end of stroke protection
- Heavy duty motor with thermal switch
- Anti-coast brake for repeatable positioning on all ball screw models. Optional on acme screw models.
- Maintenance free

General Specifications

Parameter	Electrak 5
Screw type	acme or ball
Internally restrained	no
Manual override	no, optional
Dynamic braking	no
Holding brake acme screw models ball screw models	 no, self-locking yes
End of stroke protection	overload clutch
Mid stroke protection	overload clutch
Motor protection	auto reset thermal switch
Motor connection	cable
Motor connector	no
Certificates	UL, CSA, CE
Options	• potentiometer • manual override

Performance Specifications

Parameter		Electrak 5
Maximum load, dynamic / static	[N]	
A • • -05A5 (acme screw)*		1100 / 11350
A • • -10A5 (acme screw)		2250 / 11350
A • • -20A5 (acme screw)		2250 / 11350
A • • -05B5 (ball screw)		2250 / 18000
A • • -10B5 (ball screw)		4500 / 18000
A • • -20B5 (ball screw)		4500 / 18000
A • • -21B5 (ball screw)		6800 / 18000
Speed, at no load / at maximum load	[mm/s]	
A • • -05A5 (acme screw)*		48 / 38
A • • -10A5 (acme screw)		30 / 18
A • • -20A5 (acme screw)		15 / 12
A • • -05B5 (ball screw)		61 / 37
A • • -10B5 (ball screw)		30 / 19
A • • -20B5 (ball screw)		15 / 12
A • • -21B5 (ball screw)		15 / 11
Available input voltages Single phase Three phase	[Vac]	 230** 400
Input frequency 1 × 230 Vac model 3 × 400 Vac model	[Hz]	 50/60 50
Standard stroke lengths	[inch]	4, 6, 8, 10, 12, 14, 16, 18, 20, 24
Operating temperature limits	[°C]	-25 – +65
Full load duty cycle @ 25 °C	[%]	25
Maximum on time	[s]	45
End play, maximum	[mm]	1,0
Restraining torque	[Nm]	11,3
Lead cross section	[mm^2]	1,5
Cable length	[mm]	600
Protection class		IP45

* Not possible with 400 Vac input voltage.
** 10 µF capacitor required to run the actuator, p/n 9200-448-003

Compatible Controls

Control model	See page
DPDT switch	53

Electrak 5

230 and 400 Vac - load up to 6800 N

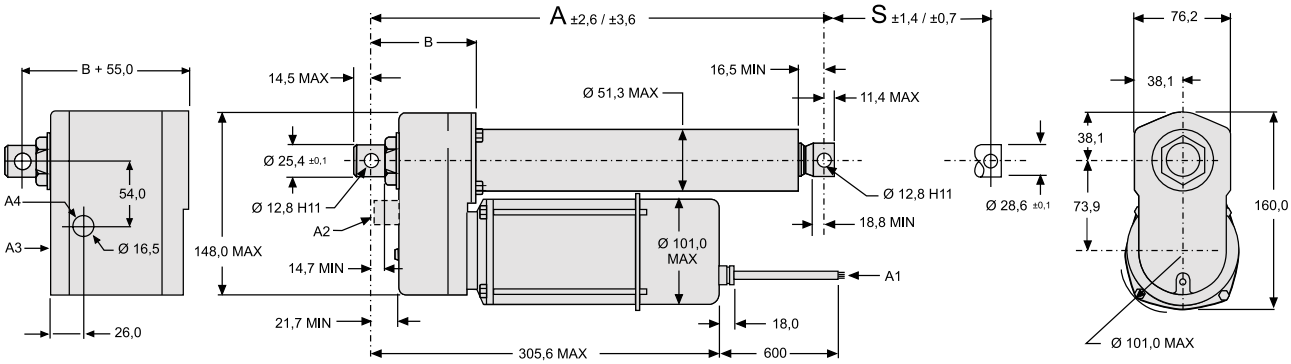

S: stroke, tolerance acme / ball screw
A: retracted length, tolerance acme / ball screw
A1: cable
A2: manual override input (optional)
A3: housing dimensions for potentiometer option
A4: potentiometer cable output, cable length = min. 500 mm
B: 86,1 mm

Stroke (S)	[inch (mm)]	4 (101,6)	6 (152,4)	8 (203,2)	10 (254,0)	12 (304,8)	14 (355,6)	16 (406,4)	18 (457,2)	20 (508,0)	24 (609,6)
Retracted length, acme screw models (A)	**[mm]**	262,3	313,1	363,9	414,7	465,5	567,1	617,9	668,7	719,5	821,1
Retracted length, ball screw models (A)	**[mm]**	302,3	353,1	403,9	454,7	505,5	607,1	657,9	708,7	759,5	861,1
Add on length for potentiometer*	**[mm]**	55,0	55,0	55,0	55,0	55,0	55,0	55,0	55,0	55,0	55,0
Weight, acme screw models	**[kg]**	5,9	6,1	6,3	6,5	6,7	6,9	7,1	7,3	7,5	7,8
Weight, ball screw models	**[kg]**	6,5	6,7	6,9	7,1	7,3	7,5	7,7	7,9	8,1	8,4
Add on weight for potentiometer*	**[kg]**	1,3	1,3	1,3	1,3	1,3	1,3	1,3	1,3	1,3	1,3
Potentiometer resistance change*	**[ohm/mm]**	39	39	39	39	20	20	20	20	20	10

* Potentiometer is optional (NPO, BPO option)

Performance Diagrams

Acme Screw Models
Speed and Current vs. Load

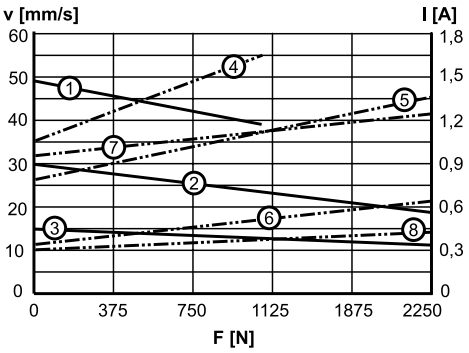

V: speed
I: current
F: load

1: speed A22 -05A5
2: speed A• • -10A5
3: speed A• • -20A5
4. current 230 Vac, A22-05A5
5: current 230 Vac, A22-10A5
6: current 400 Vac, A42-10A5
7: current 230 Vac, A22-20A5
8: current 400 Vac, A42-20A5

Ball Screw Models
Speed and Current vs. Load

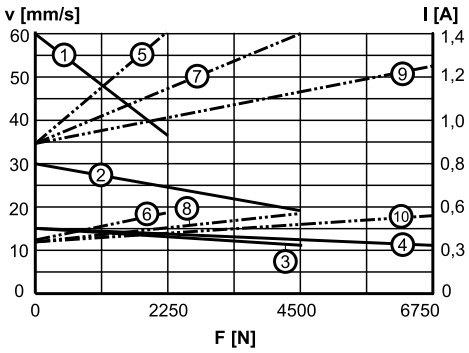

V: speed
I: current
F: load

1: speed A22-05B5, A42-05B5
2: speed A22-10B5, A42-10B5
3: speed A22-20B5, A42-20B5
4: speed A22-21B5, A42-21B5
5. current 230 Vac, A22-05B5
6: current 400 Vac, A42-05B5
7: current 230 Vac, A22-10B5, A22-20B5
8: current 400 Vac, A42-10B5, A42-20B5
9: current 230 Vac, A22-21B5
10: current 400 Vac, A42-21B5

Electrak LA24

230 and 400 Vac - load up to 6800 N

» Ordering Key - see page 74
» Glossary - see page 80
» Electric Wiring Diagram - see page 50

Standard Features and Benefits

- Robust, strong and reliable
- Corrosion free aluminium cover tube
- Stainless steel extension tube
- Acme or ball screw models
- Rugged and robust
- Withstands very harsh environments
- Trunnion mounting possible
- Overload clutch for mid and end of stroke protection
- T-slot grooves in the cover tube for magnetic sensors
- Heavy duty motor with thermal switch
- Anti-coast brake for repeatable positioning on all ball screw models. Optional on acme screw models.
- Maintenance free

General Specifications

Parameter	Electrak LA24
Screw type	acme or ball
Internally restrained	yes
Manual override	no, optional
Dynamic braking	no
Holding brake acme screw models ball screw models	 no, self-locking yes
End of stroke protection	overload clutch
Mid stroke protection	overload clutch
Motor protection	auto reset thermal switch
Motor connection	cable
Motor connector	no
Certificates	UL, CSA, CE
Options	• potentiometer • manual override

Performance Specifications

Parameter		Electrak LA24
Maximum load, dynamic / static	[N]	
AA • • -05A65M (acme screw)*		1100 / 11350
AA • • -10A65M (acme screw)		2250 / 11350
AA • • -20A65M (acme screw)		2250 / 11350
AA • • -05B65M (ball screw)		2250 / 18000
AA • • -10B65M (ball screw)		4500 / 18000
AA • • -20B65M (ball screw)		4500 / 18000
AA • • -21B65M (ball screw)		6800 / 18000
Speed, at no load / at maximum load	[mm/s]	
AA • • -05A65M (acme screw)*		48 / 38
AA • • -10A65M (acme screw)		30 / 18
AA • • -20A65M (acme screw)		15 / 12
AA • • -05B65M (ball screw)		61 / 37
AA • • -10B65M (ball screw)		30 / 19
AA • • -20B65M (ball screw)		15 / 12
AA • • -21B65M (ball screw)		15 / 11
Available input voltages Single phase Three phase	[Vac]	 230** 400
Input frequency 1 × 230 Vac model 3 × 400 Vac model	[Hz]	 50/60 50
Standard stroke lengths	[inch]	50, 100, 150, 200, 250, 300, 350, 400, 450, 500, 550, 600
Operating temperature limits	[°C]	-25 – +65
Full load duty cycle @ 25 °C	[%]	25
Maximum on time	[s]	45
End play, maximum	[mm]	1,0
Restraining torque	[Nm]	0
Lead cross section	[mm²]	1,5
Cable length	[mm]	600
Protection class		IP45

* Not possible with 400 Vac input voltage.
** 10 µF capacitor required to run the actuator, p/n 9200-448-003

Compatible Controls

Control model	See page
DPDT switch	53

Electrak LA24

230 and 400 Vac - load up to 6800 N

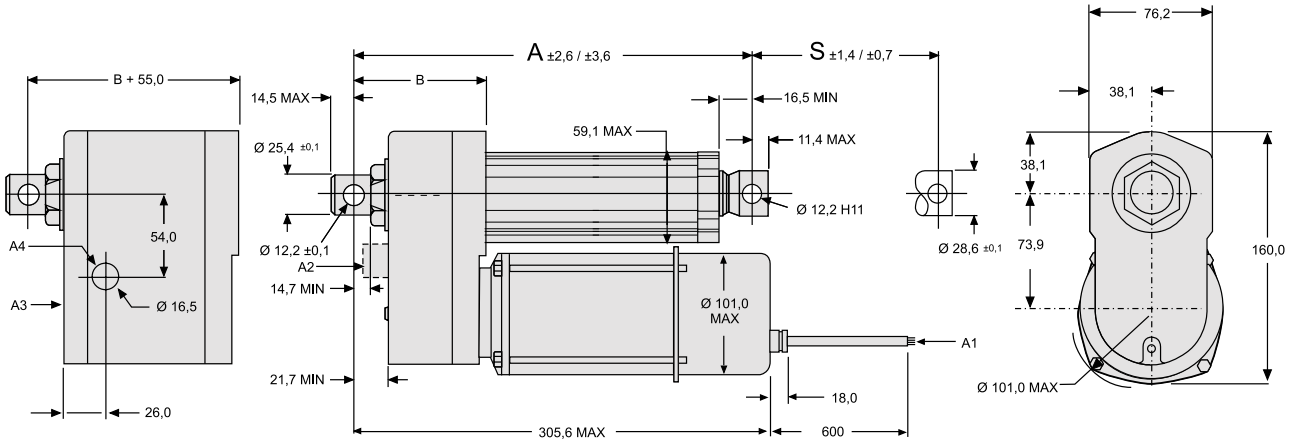

S: stroke, tolerance acme / ball screw
A: retracted length, tolerance acme / ball screw
A1: cable
A2: manual override input (optional)
A3: housing dimensions for potentiometer option
A4: potentiometer cable output, cable length = min. 500 mm
B: 86,1 mm

Stroke (S)	[mm]	50	100	150	200	250	300	350	400	450	500	550	600
Retracted length, acme screw models (A)	[mm]	216,7	266,7	316,7	366,7	416,7	466,7	566,7	616,7	666,7	716,7	766,7	816,7
Retracted length, ball screw models (A)	[mm]	269,6	319,6	369,6	419,6	469,6	519,6	619,6	669,6	719,6	769,6	819,6	869,6
Add on length for potentiometer*	[mm]	55,0	55,0	55,0	55,0	55,0	55,0	55,0	55,0	55,0	55,0	55,0	55,0
Weight, acme screw models	[kg]	6,0	6,2	6,4	6,6	6,8	7,0	7,3	7,5	7,7	7,9	8,1	8,3
Weight, ball screw models	[kg]	6,8	7,0	7,2	7,4	7,6	7,8	8,1	8,3	8,5	8,7	8,9	9,1
Add on weight for potentiometer*	[kg]	1,3	1,3	1,3	1,3	1,3	1,3	1,3	1,3	1,3	1,3	1,3	1,3
Potentiometer resistance change*	[ohm/mm]	39	39	39	39	39	20	20	20	20	20	10	10

* Potentiometer is optional (NPO, BPO option)

Performance Diagrams

Acme Screw Models
Speed and Current vs. Load

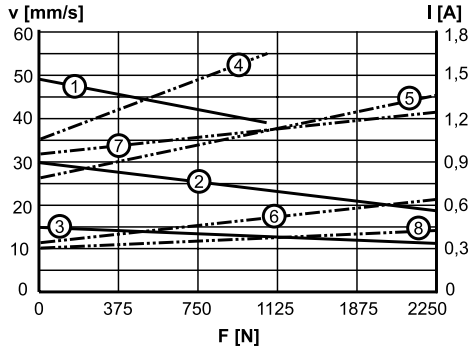

V: speed
I: current
F: load

1: speed AA22 -05A65M
2: speed AA• • -10A65M
3: speed AA• • -20A65M
4. current 230 Vac, AA22-05A65M
5: current 230 Vac, AA22-10A65M
6: current 400 Vac, AA42-10A65M
7: current 230 Vac, AA22-20A65M
8: current 400 Vac, AA42-20A65M

Ball Screw Models
Speed and Current vs. Load

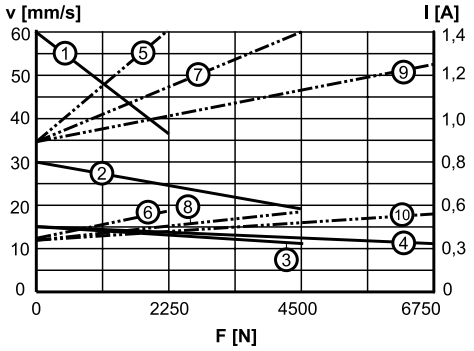

V: speed
I: current
F: load

1: speed AA22-05B65M, AA42-05B65M
2: speed AA22-10B65M, AA42-10B65M
3: speed AA22-20B65M, AA42-20B65M
4: speed AA22-21B65M, AA42-21B65M
5. current 230 Vac, AA22-05B65M
6: current 400 Vac, AA42-05B65M
7: current 230 Vac, AA22-10B65M, AA22-20B65M
8: current 400 Vac, AA42-10B65M, AA42-20B65M
9: current 230 Vac, AA22-21B65M
10: current 400 Vac, AA42-21B65M

Lifting Column TC16

24 Vdc - load up to 2000 N

» Ordering Key - see page 75
» Glossary - see page 80
» Electric Wiring Diagram - see page 49

Standard Features and Benefits

- Designed for domestic, office and medical applications
- Self supporting column in extruded anodized aluminum
- Low weight and quiet operation
- Smooth operating telescopic screw drive
- High load torque capability
- Very short retracted length
- Very low stroke to retracted length ratio
- Maintenance free
- Dynamic braking and load holding brake
- Integrated end of stroke limit switches
- EMC recognized for medical applications

Performance Specifications

Parameter		TC16
Maximum load (compression only)	[N]	2000
Maximum load torque, dynamic / static	[Nm]	150 [1] / 500
Speed, at no load / at maximum load	[mm/s]	19 / 15
Available input voltages	[Vdc]	24
Maximum standard stroke [2]	[mm]	600
Minimum standard stroke	[mm]	200
Operating temperature limits	[°C]	0 – +40
Full load duty cycle @ 20 °C	[%]	15
Maximum on time [2]	[s]	60
Restraining torque	[Nm]	0
Lead cross section	[mm²]	1,5
Cable length	[mm]	2000
Protection class		IP44

[1] Higher dynamic load available upon request, contact customer support.
[2] As the maximum stroke is 600 mm the longest possible cycle (full extend and full retract) in theory is 2 × 600 mm = 1200 mm. But as the maximum on time is 60 seconds and the speed of the unit varies between 19 - 15 mm/s depending on the load the maxium distance that can be performed in a cycle is between 60 s × 19 mm/s and 60 s × 15 mm/s = 1140 - 900 mm before the unit must come to a rest to avoid overheating. The required resting period in its turn is dependant on the allowed duty cycle. Contact customer support for more information.

General Specifications

Parameter	TC16
Screw type	trapezoidal
Internally restrained	yes
Manual override	no
Dynamic braking	yes
Holding brake	yes
End of stroke protection	end of stroke limit switches
Mid stroke protection	no
Motor protection	no
Motor connection	cable
Motor connector	DIN 41524 8 pin plug
Certificates	CE EMC for medical applications*
Options	encoder

* Emission: EN 61000-6-3:2001, EN 60601-1-2:1993, EN 55011 Class B,
Immunity: EN 61000-6-2:2001, EN 61000-4-2, EN 61000-4-3

Compatible Controls

Control model	See page
DPDT switch	53
DCG-180	58
DCG-280	58
AC-247 ELS	56

Lifting Column TC16

24 Vdc - load up to 2000 N

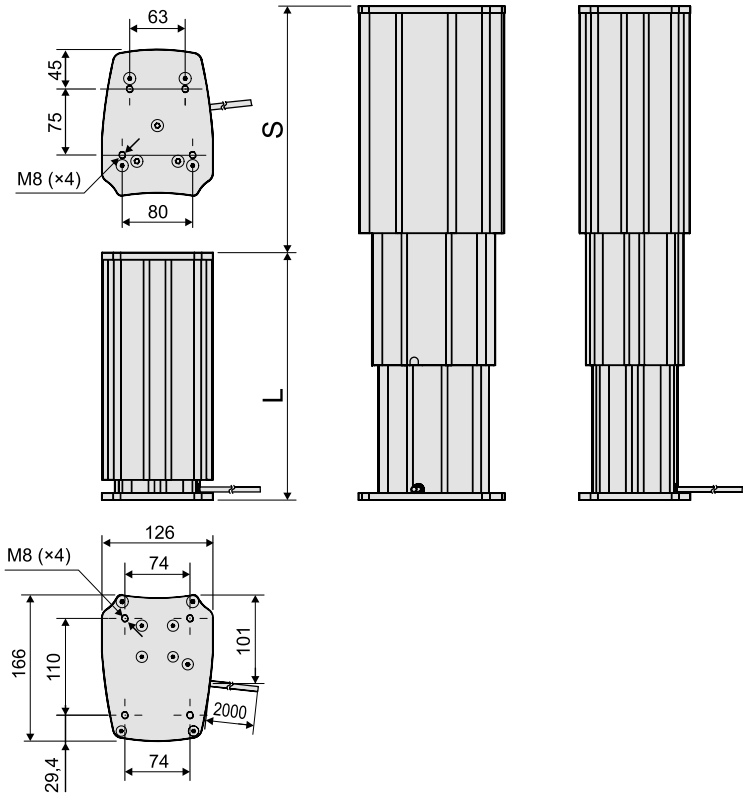

S: stroke
L: retracted length

Stroke (S), minimum and maximum	Min. possible stroke (Smin) = 200 mm, Max. possible stroke (Smax) = 600 mm
Retracted length (L), minimum and maximum	Min. retracted length (Lmin) = 250 mm, Max. retracted length (Lmax) = 600 mm
Stroke / retracted length relationship	Longest possible stroke (S) for a given retracted length (L) [mm] = L [mm] × 2 - 282
Retracted length / stroke relationship	Shortest possible retracted length (L) for a given given stroke (S) [mm] = (S [mm] + 282) / 2
Weight	Weight of unit [kg] = 3,4 + L × 0,0203 + S × 0,000755

Performance Diagrams

Speed and Current vs. Load

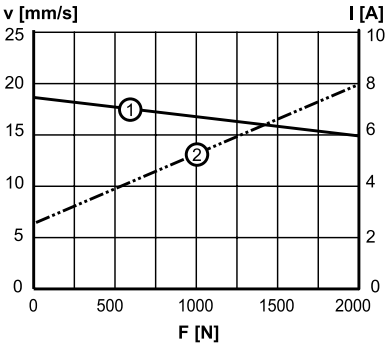

V: speed I: current F: load

1: speed
2: current

Lifting Column DMD

12, 24 and 36 Vdc - load up to 6800 N

» Ordering Key - see page 75
» Glossary - see page 80
» Electric Wiring Diagram - see page 49

Standard Features and Benefits

- Designed for industrial use
- Rugged, robust and strong
- Self supporting column in extruded anodized aluminum
- Acme or ball screw drive
- High load torque capability
- Overload clutch for mid and end of stroke protection
- T-slot grooves along the entire profile
- Maintenance free

General Specifications

Parameter	DMD
Screw type	acme or ball
Internally restrained	yes
Manual override	no
Dynamic braking	no
Holding brake acme screw models ball screw models	 no, self-locking yes
End of stroke protection	overload clutch
Mid stroke protection	overload clutch
Motor protection	auto reset thermal switch
Motor connection	cable
Motor connector	no
Certificates	CE
Options	potentiometer*

* For encoder feedback, contact customer support.

Performance Specifications

Parameter		DMD
Maximum load, dynamic / static	[N]	
DMD • • -05A5 (acme screw)		1100 / 11350
DMD • • -10A5 (acme screw)		2250 / 11350
DMD • • -20A5 (acme screw)		2250 / 11350
DMD • • -05B5 (ball screw)		2250 / 18000
DMD • • -10B5 (ball screw)		4500 / 18000
DMD • • -20B5 (ball screw)		4500 / 18000
DMD • • -21B5 (ball screw)		6800 / 18000
Maximum load torque, dynamic / static	[Nm]	
acme screw models		565 / 565
ball screw models		710 / 710
Speed, at no load / at maximum load	[mm/s]	
DMD • • -05A5 (acme screw)		54 / 32
DMD • • -10A5 (acme screw)		30 / 18
DMD • • -20A5 (acme screw)		15 / 12
DMD • • -05B5 (ball screw)		61 / 37
DMD • • -10B5 (ball screw)		30 / 19
DMD • • -20B5 (ball screw)		15 / 12
DMD • • -21B5 (ball screw)		15 / 11
Available input voltages	[Vdc]	12, 24, 36
Standard stroke lengths	[in]	4, 6, 8, 10, 12, 14, 16, 18, 20, 24
Operating temperature limits	[°C]	-25 – +65
Full load duty cycle @ 25 °C	[%]	25
End play, maximum	[mm]	1,0
Restraining torque	[Nm]	0
Lead cross section	[mm^2]	2,5
Cable length	[mm]	2000
Protection class		IP65

Compatible Controls

Control model	See page
DPDT switch	53
DCG-190	58
AC-063	54

Lifting Column DMD

12, 24 and 36 Vdc - load up to 6800 N

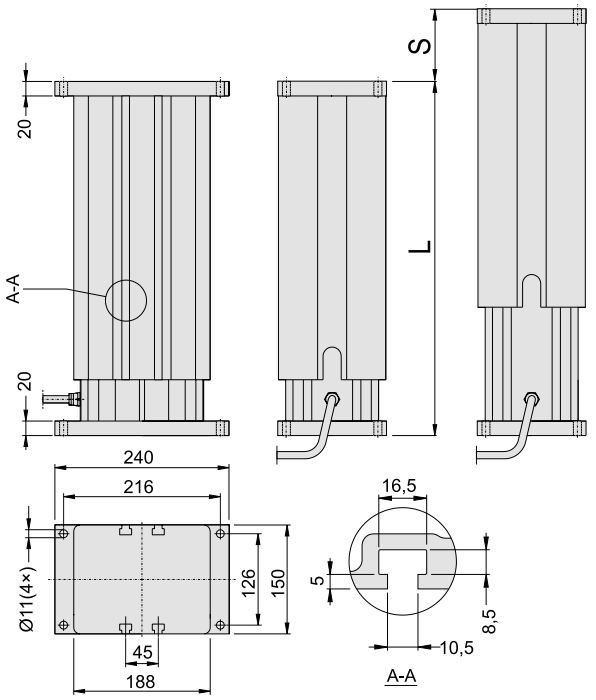

S: stroke L: retracted length

Off Center Load Capacity

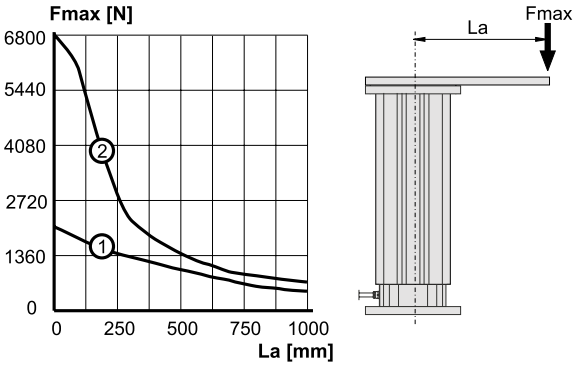

Fmax: maximum load operated La: length of lever arm

1: acme screw models
2: ball screw models

Stroke (S)	[inch (mm)]	4 (101,6)	6 (152,4)	8 (203,2)	10 (254,0)	12 (304,8)	14 (355,6)	16 (406,4)	18 (457,2)	20 (508,0)	24 (609,6)
Retracted length (L), acme screw models	[mm]	329,6	380,4	431,2	482,0	532,8	633,6	684,4	735,2	786,0	887,6
Retracted length (L), ball screw models	[mm]	369,6	420,4	471,2	522,0	572,8	673,6	724,4	775,2	826,0	927,6
Add on length for potentiometer*	[mm]	55,0	55,0	55,0	55,0	55,0	55,0	55,0	55,0	55,0	55,0
Weight, acme screw models	[kg]	18,7	20,2	21,6	23,1	24,6	27,3	28,7	30,2	31,7	34,6
Weight, ball screw models	[kg]	20,4	21,9	23,4	24,8	26,3	29,0	30,4	31,9	33,4	36,3
Add on weight for potentiometer*	[kg]	1,3	1,3	1,3	1,3	1,3	1,3	1,3	1,3	1,3	1,3

* Potentiometer is optional

Performance Diagrams

Speed and Current vs. Load - Chart 1

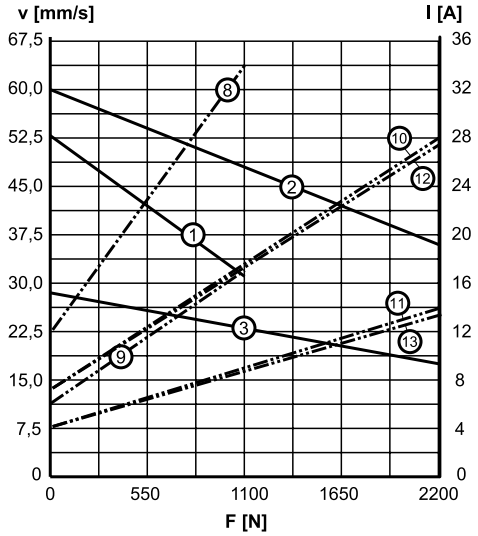

Speed and Current vs. Load - Chart 2

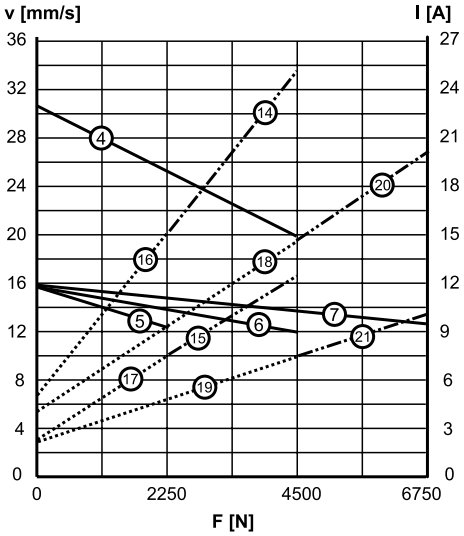

V: speed I: current F: load

1: speed DMD • • -05A5 - chart 1
2: speed DMD • • -05B5 - chart 1
3: speed DMD • • -10A5 - chart 1
4: speed DMD • • -10B5 - chart 2
5: speed DMD • • -20A5 - chart 2
6: speed DMD • • -20B5 - chart 2
7: speed DMD • • -21B5 - chart 2
8: current DMD12-05A5 - chart 1
9: current DMD24-05A5 - chart 1
10: current DMD12-05B5 - chart 1
11: current DMD24-05B5 - chart 1
12: current DMD12-10A5 - chart 1
13: current DMD24-10A5 - chart 1
14: current DMD12-10B5 - chart 2
15: current DMD24-10B5 - chart 2
16: current DMD12-20A5 - chart 2
17: current DMD24-20A5 - chart 2
18: current DMD12-20B5 - chart 2
19: current DMD24-20B5 - chart 2
20: current DMD12-21B5 - chart 2
21: current DMD24-21B5 - chart 2

Contact customer service for data on 36 Vdc models.

Lifting Column DMA

230 and 400 Vac - load up to 6800 N

» Ordering Key - see page 75
» Glossary - see page 80
» Electric Wiring Diagram - see page 50

Standard Features and Benefits

- Designed for industrial use
- Rugged, robust and strong
- Self supporting column in extruded anodized aluminum
- Acme or ball screw drive
- High load torque capability
- Overload clutch for mid and end of stroke protection
- T-slot grooves along the entire profile
- Maintenance free

General Specifications

Parameter	DMA
Screw type	acme or ball
Internally restrained	yes
Manual override	no
Dynamic braking	no
Holding brake acme screw models ball screw models	 no, self-locking yes
End of stroke protection	overload clutch
Mid stroke protection	overload clutch
Motor protection	auto reset thermal switch
Motor connection	cable
Motor connector	no
Certificates	CE
Options	potentiometer

Performance Specifications

Parameter		DMA
Maximum load, dynamic / static	[N]	
DMA22-05A5 (acme screw)*		1100 / 11350
DMA • • -10A5 (acme screw)		2250 / 11350
DMA • • -20A5 (acme screw)		2250 / 11350
DMA • • -05B5 (ball screw)		2250 / 18000
DMA • • -10B5 (ball screw)		4500 / 18000
DMA • • -20B5 (ball screw)		4500 / 18000
DMA • • -21B5 (ball screw)		6800 / 18000
Maximum load torque, dynamic / static	[Nm]	
acme screw models		565 / 565
ball screw models		710 / 710
Speed, at no load / at maximum load	[mm/s]	
DMA22-05A5 (acme screw)*		48 / 38
DMA • • -10A5 (acme screw)		30 / 18
DMA • • -20A5 (acme screw)		15 / 12
DMA • • -05B5 (ball screw)		61 / 37
DMA • • -10B5 (ball screw)		30 / 19
DMA • • -20B5 (ball screw)		15 / 12
DMA • • -21B5 (ball screw)		15 / 11
Available input voltages	[Vac]	
Single phase**		230
Three phase		400
Input frequency	[Hz]	
1 × 230 Vac model		50/60
3 × 400 Vac model		50
Standard stroke lengths	[in]	4, 6, 8, 10, 12, 14, 16, 18, 20, 24
Operating temperature limits	[°C]	-25 – +65
Maximum on time	[s]	45
Full load duty cycle @ 25 °C	[%]	25
End play, maximum	[mm]	1,0
Restraining torque	[Nm]	0
Lead cross section	[mm²]	2,5
Cable length	[mm]	2000
Protection class		IP45

* Not possible with 400 Vac input voltage
** 10 µF capacitor required to run the actuator, p/n 9200-448-003

Compatible Controls

Control model	See page
DPDT switch	53

Lifting Column DMA

230 and 400 Vac - load up to 6800 N

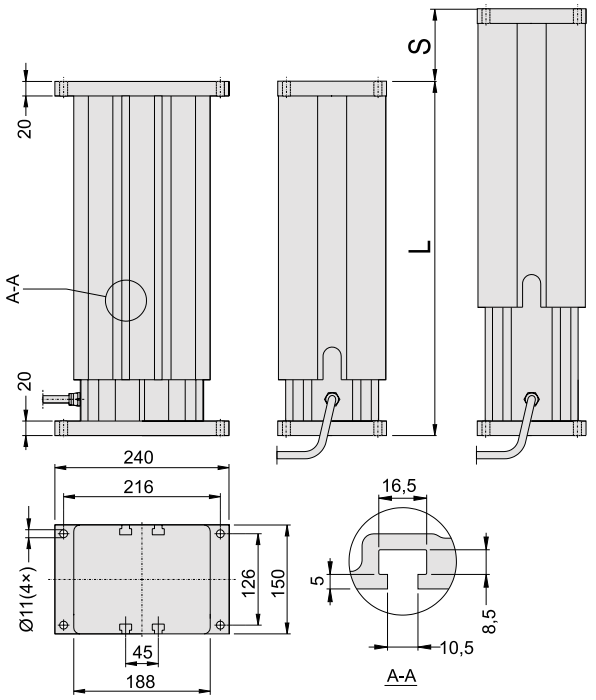

S: stroke L: retracted length

Off Center Load Capacity

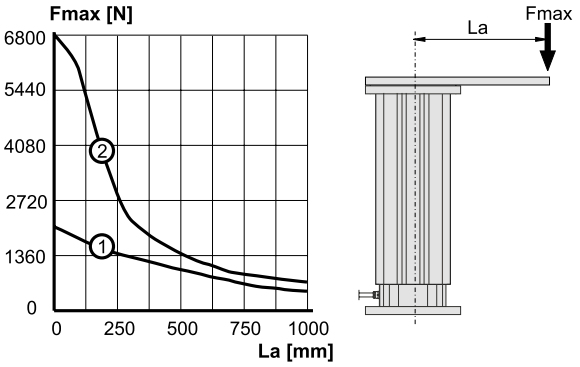

Fmax: maximum load operated La: length of lever arm

1: acme screw models
2: ball screw models

Stroke (S)	[inch (mm)]	4 (101,6)	6 (152,4)	8 (203,2)	10 (254,0)	12 (304,8)	14 (355,6)	16 (406,4)	18 (457,2)	20 (508,0)	24 (609,6)
Retracted length (L), acme screw models	[mm]	329,6	380,4	431,2	482,0	532,8	633,6	684,4	735,2	786,0	887,6
Retracted length (L), ball screw models	[mm]	369,6	420,4	471,2	522,0	572,8	673,6	724,4	775,2	826,0	927,6
Add on length for potentiometer*	[mm]	55,0	55,0	55,0	55,0	55,0	55,0	55,0	55,0	55,0	55,0
Weight, acme screw models	[kg]	20,9	22,4	23,8	25,3	26,8	29,5	30,9	32,4	33,9	36,8
Weight, ball screw models	[kg]	22,6	24,1	25,6	27,0	28,5	31,2	32,6	34,1	35,6	38,6
Add on weight for potentiometer*	[kg]	1,3	1,3	1,3	1,3	1,3	1,3	1,3	1,3	1,3	1,3

* Potentiometer is optional

Performance Diagrams

Speed and Current vs. Load - Chart 1

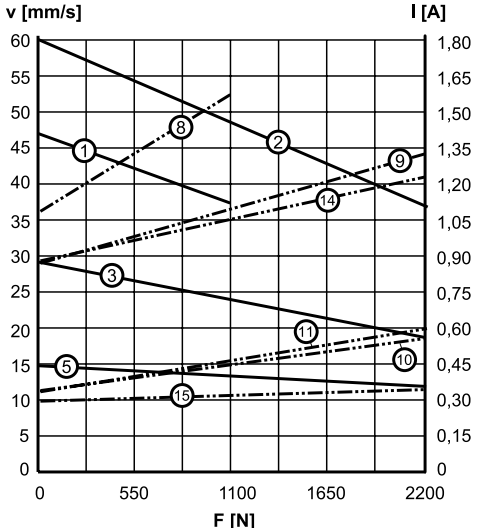

Speed and Current vs. Load - Chart 2

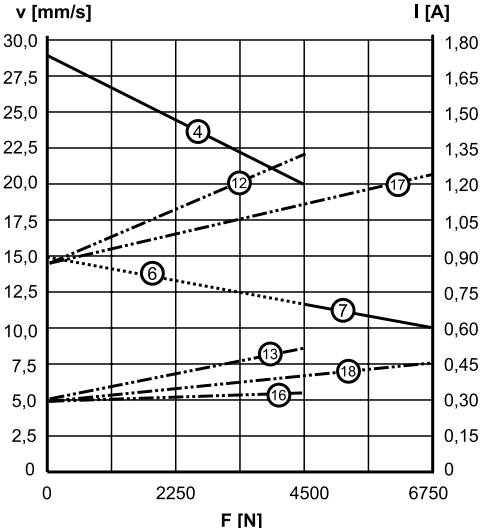

V: speed I: current F: load

1: speed DMA22-05A5 - chart 1
2: speed DMA • • -05B5 - chart 1
3: speed DMA • • -10A5 - chart 1
4: speed DMA • • -10B5 - chart 2
5: speed DMA • • -20A5 - chart 1
6: speed DMA • • -20B5 - chart 2
7: speed DMA • • -21B5 - chart 2
8: current DMA22-05A5 - chart 1
9: current DMA22-05B5 and DMA22-10A5 - chart 1
10: current DMA42-05B5 - chart 1
11: current DMA42-10A5 - chart 1
12: current DMA22-10B5 and DMA22-20B5 - chart 2
13: current DMA42-10B5 - chart 2
14: current DMA22-20A5 - chart 1
15: current DMA42-20A5 - chart 1
16: current DMA42-20B5 - chart 2
17: current DMA22-21B5 - chart 2
18: current DMA42-21B5 - chart 2

Rodless Actuator LM80-H

12 and 24 Vdc - load up to 2000 N

» Ordering Key - see page 76
» Glossary - see page 80
» Electric Wiring Diagram - see page 49

Standard Features and Benefits

- Rodless actuator for horizontal operation
- For use in domestic, office or medical applications
- Rigid self supporting extruded aluminum profile
- Durable and corrosion free
- Lightweight and quiet operation
- Safety nut on ball screw versions
- Easy and fast T-slot mounting
- Maintenance free

General Specifications

Parameter	LM80-H
Screw type	trapezoidal or ball
Internally restrained	yes
Manual override	no
Dynamic braking	no
Holding brake	no
End of stroke protection	spring loaded soft stop
Mid stroke protection	no
Motor protection	no
Motor connection with motor enclosure no motor enclosure	 cable no cable, clips on motor
Motor connector with motor enclosure no motor enclosure	 DIN 41524 8 pin plug clips on motor
Certificates	CE
Options	• no motor enclosure • manual override • alternative motor positions • stroke over 1500 mm* • encoder *

* Contact customer support

Performance Specifications

Parameter		LM80-H
Maximum load (Fb)	[N]	2000
Maximum load torque (Mb) DT•• -T68M ••••• H DT•• -B61M ••••• H DT•• -B62M ••••• H DT•• -B65M ••••• H	[Nm]	 250 400 180 750
Speed, at no load / at maximum load DT•• -T68M ••••• H DT•• -B61M ••••• H DT12 -B62M ••••• H DT24 -B62M ••••• H DT•• -B65M ••••• H	[mm/s]	 44 / 37 55 / 50 110 / 73 110 / 87 28 / 28
Available input voltages	[Vdc]	12, 24
Standard stroke lengths	[mm]	500, 600, 700, 800, 900, 1000, 1100, 1200, 1300, 1400, 1500
Operating temperature limits	[°C]	0 – +40
Full load duty cycle @ 20 °C	[%]	15
Maximum on time	[s]	120
End play, maximum	[mm]	1,0
Restraining torque	[Nm]	0
Lead cross section with / without motor enclosure	[mm²]	 1,5 / –
Cable length with / without motor enclosure	[mm]	 2000 / –
Protection class with / without motor enclosure		 IP44 / IP33

Compatible Controls

Control model	See page
DPDT switch	53
DCG-170	58
AC-247 ELS	56

Rodless Actuator LM80-H

12 and 24 Vdc - load up to 2000 N

! Note: this unit may only be mounted horizontaly.

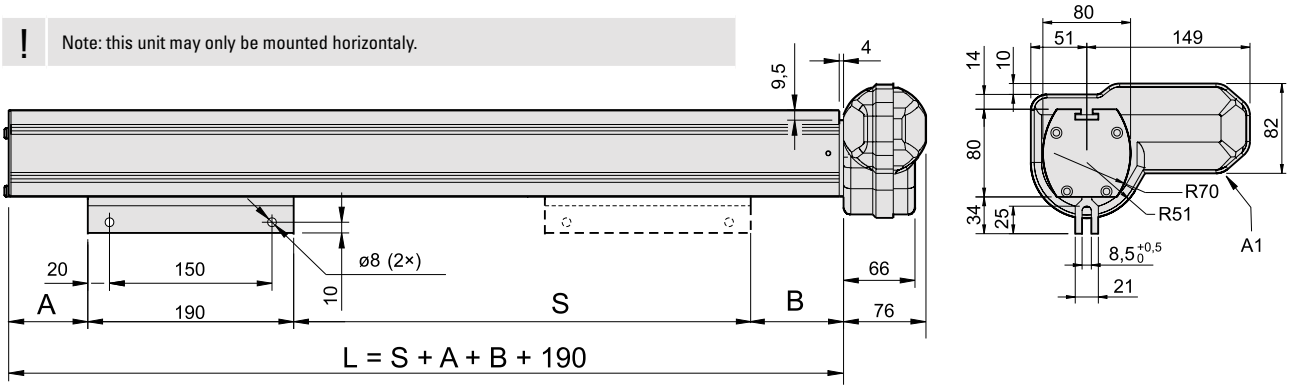

S: stroke
L: length of profile
A1: motor shown in position A (standard position)

Stroke (S)	[mm]	500	600	700	800	900	1000	1100	1200	1300	1400	1500
Dimensions (A) / (B)	[mm]											
DT•• -T68M ••••• H							54,0 / 77,0					
DT•• -B61M ••••• H							102,0 / 77,0					
DT•• -B62M ••••• H							102,0 / 77,0					
DT•• -B65M ••••• H							79,0 / 77,0					
Weight	[kg]											
DT•• -T68M ••••• H		11,2	13,1	14,8	16,6	18,1	20,2	22,0	23,8	25,5	27,4	29,1
DT•• -B61M ••••• H		12,1	13,9	15,7	17,5	19,3	21,0	22,9	24,6	26,3	28,2	30,0
DT•• -B62M ••••• H		12,1	13,9	15,7	17,5	19,3	21,0	22,9	24,6	26,3	28,2	30,0
DT•• -B65M ••••• H		11,7	13,5	15,3	17,1	18,9	20,6	22,4	24,2	26,0	27,8	29,6

Performance Diagrams

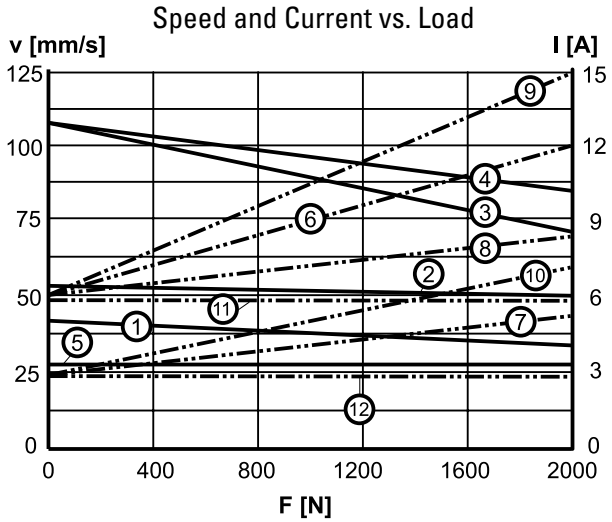

V: speed I: current F: load

1: speed DT •• -T68M ••••• H
2: speed DT •• -B61M ••••• H
3: speed DT12-B62M ••••• H
4: speed DT24-B62M ••••• H
5: speed DT •• -B65M ••••• H
6: current DT12-T68M ••••• H
7: current DT24-T68M ••••• H and DT24-B61M ••••• H
8: current DT12-B61M ••••• H
9: current DT12-B62M ••••• H
10: current DT24-B62M ••••• H
11: current DT12-B65M ••••• H
12: current DT24-B65M ••••• H

Definition of Forces

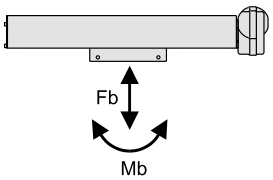

Deflection of Profile

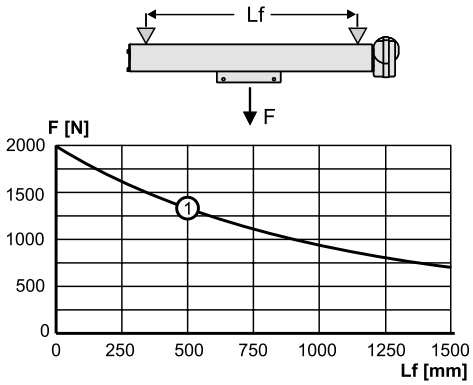

F: load Lf: distance between mounting points

1: maximum allowed deflection

Rodless Actuator LM80-V

12 and 24 Vdc - load up to 2000 N

» Ordering Key - see page 76
» Glossary - see page 80
» Electric Wiring Diagram - see page 49

Standard Features and Benefits

- Rodless actuator for vertical operation with motor down
- For use in domestic, office or medical applications
- Rigid self supporting extruded aluminum profile
- Durable and corrosion free
- Holding brake prevents downward motion at power off
- Lightweight and quiet operation
- Safety nut on ball screw versions
- Easy and fast T-slot mounting
- Optional spline safety function
- Maintenance free

General Specifications

Parameter	LM80-V
Screw type	trapezoidal or ball
Internally restrained	yes
Manual override	no
Dynamic braking	no
Holding brake	yes
End of stroke protection	spring loaded soft stop
Mid stroke protection	no
Motor protection	no
Motor connection with motor enclosure no motor enclosure	 cable no cable, clips on motor
Motor connector with motor enclosure no motor enclosure	 DIN 41524 8 pin plug clips on motor
Certificates	CE
Options	• no motor enclosure • manual override • alternative motor positions • spline safety function • stroke over 1500 mm* • encoder *

* Contact customer support

Performance Specifications

Parameter		LM80-V
Maximum load (Fa)	[N]	
DT•• -T68M ••••• V(F)		650
DT•• -B61M ••••• V(F)		1000
DT•• -B62M ••••• V(F)		450
DT•• -B65M ••••• V(F)		2000
Maximum load torque (Ma)	[Nm]	
DT•• -T68M ••••• V(F)		250
DT•• -B61M ••••• V(F)		400
DT•• -B62M ••••• V(F)		180
DT•• -B65M ••••• V(F)		750
Speed, at no load / at maximum load	[mm/s]	
DT12 -T68M ••••• V(F)		44 / 29
DT24 -T68M ••••• V(F)		44 / 35
DT12 -B61M ••••• V(F)		55 / 37
DT24 -B61M ••••• V(F)		55 / 43
DT12 -B62M ••••• V(F)		110 / 67
DT24 -B62M ••••• V(F)		110 / 83
DT12 -B65M ••••• V(F)		28 / 19
DT24 -B65M ••••• V(F)		28 / 22
Available input voltages	[Vdc]	12, 24
Standard stroke lengths	[mm]	500, 600, 700, 800, 900, 1000, 1100, 1200, 1300, 1400, 1500
Operating temperature limits	[°C]	0 – +40
Full load duty cycle @ 20 °C	[%]	15
Maximum on time	[s]	120
Restraining torque	[Nm]	0
Lead cross section with / without motor enclosure	[mm²]	 1,5 / –
Cable length with / without motor enclosure	[mm]	 2000 / –
Protection class with / without motor enclosure		 IP44 / IP33

Compatible Controls

Control model	See page
DPDT switch	53
DCG-160	58
AC-247 ELS	56

Rodless Actuator LM80-V

12 and 24 Vdc - load up to 2000 N

! Note: this unit may only be mounted vertically with the motor down even if drawing shows it horizontaly.

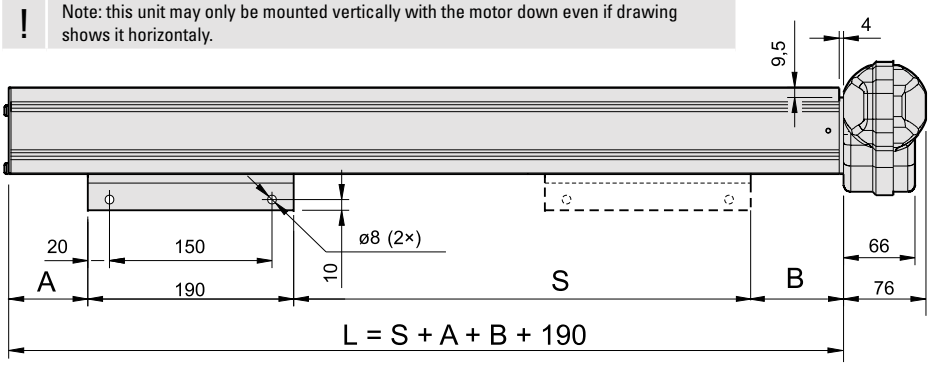

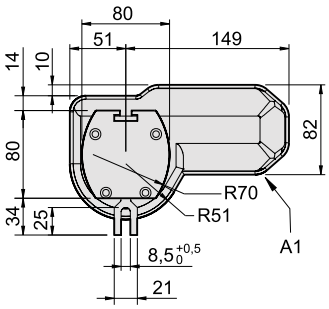

S: stroke
L: length of profile
A1: motor shown in position A (standard position)

Stroke (S)	[mm]	500	600	700	800	900	1000	1100	1200	1300	1400	1500
Dimensions (A) / (B)	[mm]											
DT•• -T68M ••••• V							50,0 / 71,0					
DT•• -B61M ••••• V							53,0 / 120,0					
DT•• -B62M ••••• V							53,0 / 120,0					
DT•• -B65M ••••• V							53,0 / 97,0					
DT•• -T68M ••••• F							50,0 / 90,0					
DT•• -B61M ••••• F							53,0 / 144,0					
DT•• -B62M ••••• F							53,0 / 144,0					
DT•• -B65M ••••• F							53,0 / 126,0					
Weight*	[kg]											
DT•• -T68M ••••• V		11,1	12,9	14,7	16,5	18,2	20,0	21,8	23,6	25,4	27,2	28,9
DT•• -B61M ••••• V		11,6	13,4	15,2	17,0	18,7	20,5	22,3	24,1	25,9	27,7	29,5
DT•• -B62M ••••• V		11,6	13,4	15,2	17,0	18,7	20,5	22,3	24,1	25,9	27,7	29,5
DT•• -B65M ••••• V		12,0	13,8	15,6	17,6	19,3	21,1	22,9	24,7	26,5	28,2	30,1

* Add 0,5 kg to the below weights to get the weights for DT•• -T68M ••••• F, DT•• -B61M ••••• F, DT•• -B62M ••••• F and DT•• -B65M ••••• F.

Performance Diagrams

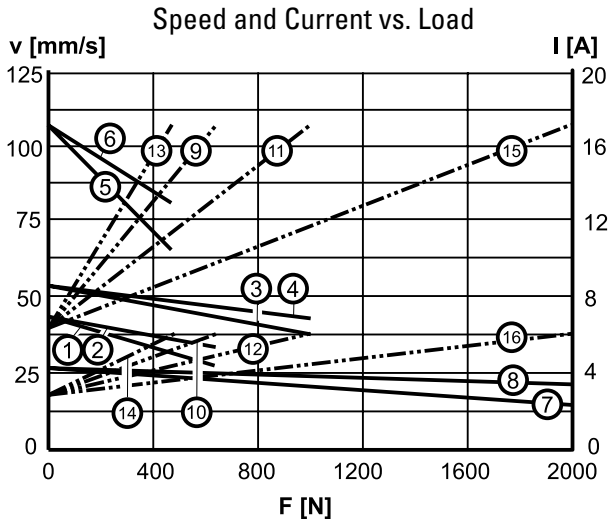

V: speed I: current F: load

1: speed DT12-T68M ••••• V(F)
2: speed DT24-T68M ••••• V(F)
3: speed DT12-B61M ••••• V(F)
4: speed DT24-B61M ••••• V(F)
5: speed DT12-B62M ••••• V(F)
6: speed DT24-B62M ••••• V(F)
7: speed DT12-B65M ••••• V(F)
8: speed DT24-B65M ••••• V(F)
9: current DT12-T68M ••••• V(F)
10: current DT24-T68M ••••• V(F)
11: current DT12-B61M ••••• V(F)
12: current DT24-B61M ••••• V(F)
13: current DT12-B62M ••••• V(F)
14: current DT24-B62M ••••• V(F)
15: current DT12-B65M ••••• V(F)
16: current DT24-B65M ••••• V(F)

Definition of Forces

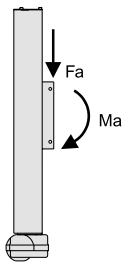

Rodless Actuator LM80-I

24 Vdc - load up to 2000 N

» Ordering Key - see page 77
» Glossary - see page 80
» Electric Wiring Diagram - see page 49

Standard Features and Benefits

- Rodless actuator for vertical operation with motor down
- For use in domestic, office or medical applications
- Rigid self supporting extruded aluminum profile
- Durable and corrosion free
- Holding brake prevents downward motion at power off
- Lightweight and quiet operation
- Safety nut on ball screw versions
- Easy and fast T-slot mounting
- Maintenance free

General Specifications

Parameter	LM80-I
Screw type	trapezoidal or ball
Internally restrained	yes
Manual override	no
Dynamic braking	no
Holding brake	yes
End of stroke protection	spring loaded soft stop
Mid stroke protection	no
Motor protection	no
Motor connection	cable
Motor connector	DIN 41524 8 pin plug
Certificates	CE
Options	• manual override • encoder • stroke over 1500 mm*

* Contact customer support

Performance Specifications

Parameter		LM80-I
Maximum load (Fa)	[N]	
DT24-T68M • • • GCV		650
DT24-B61M • • • GCV		1000
DT24-B62M • • • GCV		450
DT24-B65M • • • GCV		2000
Maximum load torque (Ma)	[Nm]	
DT24-T68M • • • GCV		250
DT24-B61M • • • GCV		400
DT24-B62M • • • GCV		180
DT24-B65M • • • GCV		750
Speed, at no load / at maximum load	[mm/s]	
DT24-T68M • • • GCV		24 / 22
DT24-B61M • • • GCV		31 / 27
DT24-B62M • • • GCV		61 / 55
DT24-B65M • • • GCV		15 / 13
Available input voltages	[Vdc]	24
Standard stroke lengths	[mm]	500, 600, 700, 800, 900, 1000, 1100, 1200, 1300, 1400, 1500
Operating temperature limits	[°C]	0 – +40
Full load duty cycle @ 20 °C	[%]	15
Maximum on time	[s]	120
Restraining torque	[Nm]	0
Lead cross section	[mm^2]	1,5
Cable length	[mm]	2000
Protection class		IP44

Compatible Controls

Control model	See page
DPDT switch	53
DCG-180	58
DCG-260	58
AC-247 ELS	56

Rodless Actuator LM80-I

24 Vdc - load up to 2000 N

! Note: this unit may only be mounted vertically with the motor down even if drawing shows it horizontaly.

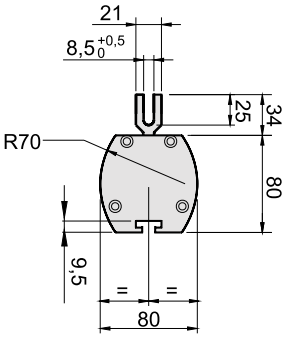

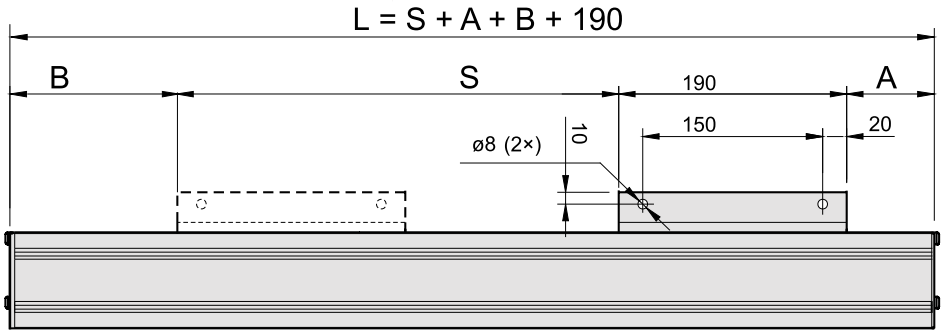

S: stroke
L: length of profile

A: non motor side
B: motor side

Stroke (S)	[mm]	500	600	700	800	900	1000	1100	1200	1300	1400	1500
Dimensions (A) / (B)	[mm]											
DT24-T68M • • • GCV							50,0 / 238,0					
DT24-B61M • • • GCV							53,0 / 287,0					
DT24-B62M • • • GCV							53,0 / 287,0					
DT24-B65M • • • GCV							53,0 / 264,0					
Weight	[kg]											
DT24-T68M • • • GCV		11,1	12,9	14,7	16,5	18,2	20,0	21,8	23,6	25,4	27,2	28,9
DT24-B61M • • • GCV		11,6	13,4	15,2	17,0	18,7	20,5	22,3	24,1	25,9	27,7	29,5
DT24-B62M • • • GCV		11,6	13,4	15,2	17,0	18,7	20,5	22,3	24,1	25,9	27,7	29,5
DT24-B65M • • • GCV		12,0	13,8	15,6	17,6	19,3	21,1	22,9	24,7	26,5	28,2	30,1

Performance Diagrams

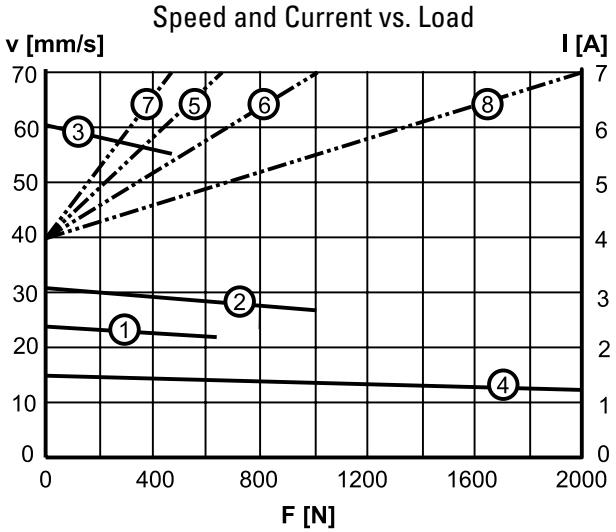

V: speed I: current F: load

1: speed DT24-T68M • • • GCV
2: speed DT24-B61M • • • GCV
3: speed DT24-B62M • • • GCV
4: speed DT24-B65M • • • GCV
5: current DT24-T68M • • • GCV
6: current DT24-B61M • • • GCV
7: current DT24-B62M • • • GCV
8: current DT24-B65M • • • GCV

Definition of Forces

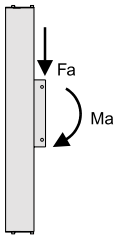

Electrak Non-driven Actuator PPA-M

» Ordering Key - see page 78
» Glossary - see page 80

Load up to 6670 N

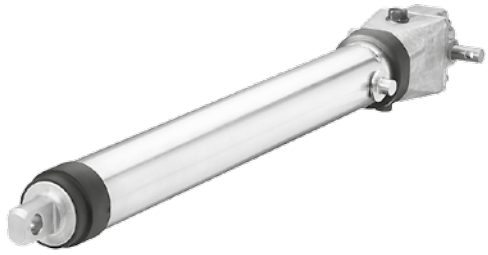

Standard Features and Benefits

- Actuator with double input shafts to which a customer supplied motor or/and an intermediate shaft can be mounted
- Can be operated manually
- Robust and versatile
- Withstands very harsh environments
- Highly efficient ball screw drive system
- Holding brake prevents back driving
- Trunnion to clevis mounting
- Maintenance free

General Specifications

Parameter	Electrak PPA-M
Screw type	ball
Internally restrained	no
Manual override	no*
Holding brake	yes
End of stroke protection	no
Mid stroke protection	no
Certificates	–
Options	protective bellows

* Either of the two input shafts can be used for manual operation if both shafts are not connected to a motor or an intermediate shaft.

Performance Specifications

Parameter		PPA-M
Maximum load, dynamic / static	[N]	6670 / 13350
Maximum speed at max. load	[mm/s]	8
Maximum input torque	[Nm]	9
Maximum input speed	[rpm]	100
Standard stroke lengths	[in]	4, 8, 12, 18, 24, 36
Operating temperature limits	[°C]	-25 – +65
End play, maximum	[mm]	1,0
Restraining torque	[Nm]	23

Electrak Non-driven Actuator PPA-M

Load up to 6670 N

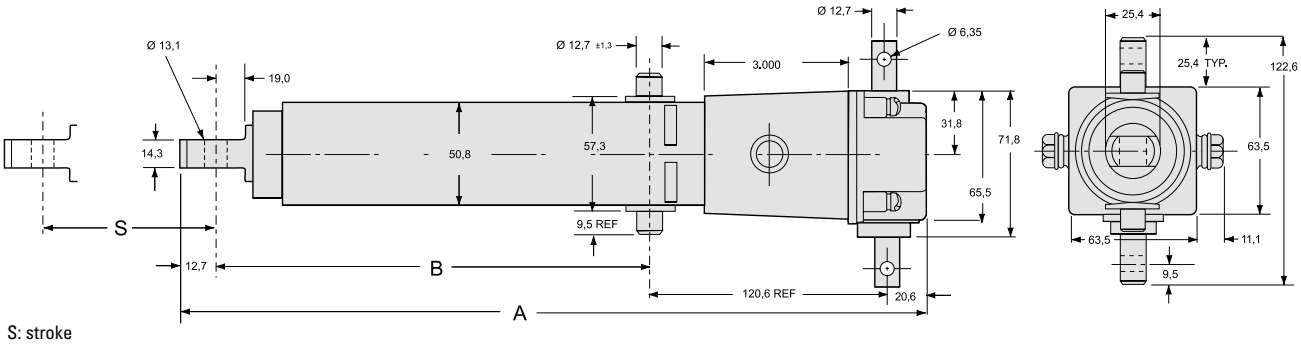

S: stroke
A: retracted length
B: retracted length to trunnions

Stroke (S)	[inch (mm)]	4 (101,6)	8 (203,2)	12 (304,8)	18 (457,2)	24 (609,6)	36 (914,4)
Retracted length (A)	**[mm]**	375,9	477,5	579,1	782,3	934,7	1239,5
Retracted length to trunnions (B)	**[mm]**	223,5	325,1	426,7	629,9	782,3	1087,1
Weight	**[kg]**	3,4	4,2	4,8	6,1	7,3	9,7

Synchronous Operation

Two or more PPA-M actuators can easily be mechanically linked for synchronous operation by using intermediate shafts. The intermediate shafts and necessary couplings are provided by the customer.

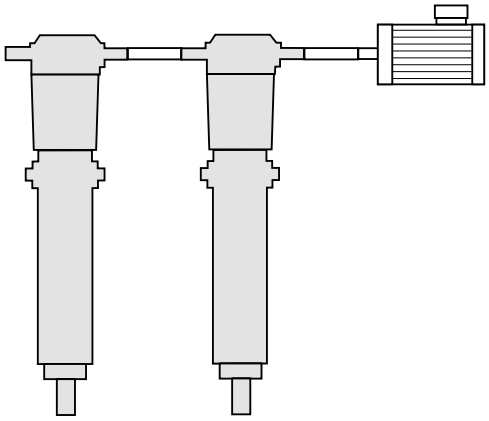

Electrak Non-driven Actuator FA14

» Ordering Key - see page 78
» Glossary - see page 80

Load up to 6800 N

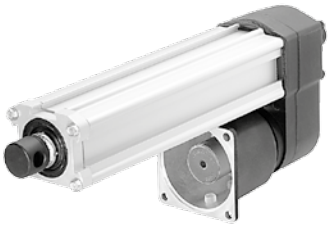

Standard Features and Benefits

- Actuator with a flange where a customer supplied motor can be mounted
- Rugged and robust
- Withstands very harsh environments
- Stainless steel extension tube
- Corrosion free aluminium cover tube
- Acme or ball screw drive
- Trunnion mounting possible
- Overload clutch for mid and end of stroke protection
- T-slot grooves in the cover tube for magnetic sensors
- Maintenance free

General Specifications

Parameter	FA14
Screw type	acme or ball
Internally restrained	yes
Manual override	no, optional
Holding brake acme screw versions ball screw versions	 no, self-locking yes
End of stroke protection	overload clutch
Mid stroke protection	overload clutch
Certificates	CE
Options	• manual override • alternative adaptor positions • custom color*

* Contact customer support

Performance Specifications

Parameter		FA14
Maximum load, dynamic / static	[N]	
FA14-05A65 (acme screw)		1100 / 11350
FA14-10A65 (acme screw)		2250 / 11350
FA14-20A65 (acme screw)		2250 / 11350
FA14-05B65 (ball screw)		2250 / 18000
FA14-10B65 (ball screw)		4500 / 18000
FA14-20B65 (ball screw)		4500 / 18000
FA14-21B65 (ball screw)		6800 / 18000
Maximum speed at max. load*	[mm/s]	
FA14-05A65 (acme screw)		32
FA14-10A65 (acme screw)		18
FA14-20A65 (acme screw)		12
FA14-05B65 (ball screw)		37
FA14-10B65 (ball screw)		19
FA14-20B65 (ball screw)		12
FA14-21B65 (ball screw)		11
Maximum input torque	[Nm]	1,8
Maximum input speed	[rpm]	3000
Standard stroke lengths	[mm]	50, 100, 150, 200, 250, 300, 350, 400, 450, 500, 550 ,600
Operating temperature limits	[°C]	-25 – +65
End play, maximum	[mm]	1,0
Restraining torque	[Nm]	0

* Recommended maximum speed

Electrak Non-driven Actuator FA14

Load up to 6800 N

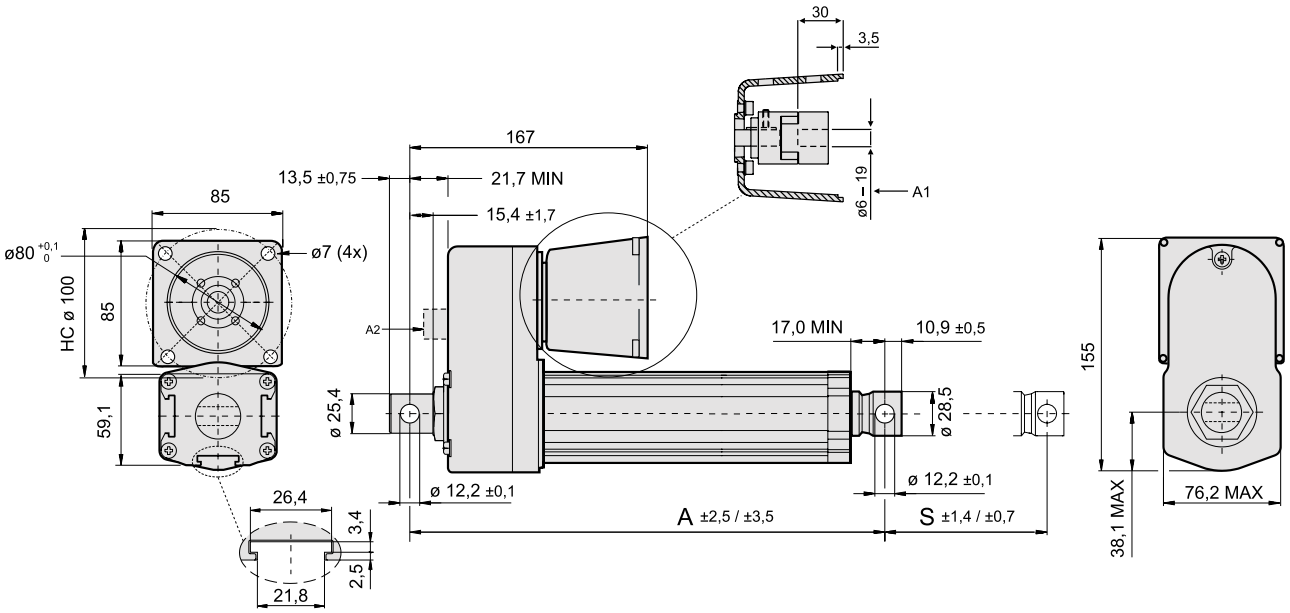

S: stroke, tolerance acme / ball screw
A: retracted length, tolerance acme / ball screw
A1: minimum/maximum input shaft bore in the coupling (supplied with a 6 mm hole)
A2: manual override input (optional)

Stroke (S)	[mm]	50	100	150	200	250	300	350	400	450	500	550	600
Retracted length (A), acme screw models	[mm]	216,7	266,7	316,7	366,7	416,7	466,7	566,7	616,7	666,7	716,7	766,7	816,7
Retracted length (A), ball screw models	[mm]	269,6	319,6	369,6	419,6	469,6	519,6	619,6	669,6	719,6	769,6	819,6	869,6
Weight, acme screw models	[kg]	3,5	3,7	4,0	4,2	4,5	4,7	5,0	5,2	5,5	5,7	6,0	6,3
Weight, ball screw models	[kg]	4,2	4,5	4,7	5,0	5,2	5,5	5,7	6,0	6,2	6,5	6,7	7,0

Electrical Wiring Diagrams

DC-actuators

Electrak 1 and 1SP

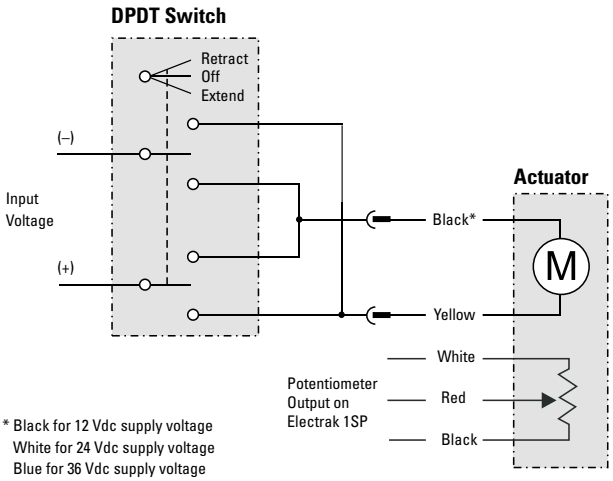

Connect the yellow lead to positive and black, white or blue* to negative to extend the actuator. Change polarity to retract the actuator. The potentiometer output has 0 ohm between white and red when the actuator is fully retracted. The actuator should be protected from overload conditions by a customer provided fuse in the circuit (6 A for 12 Vdc, 3 A for 24 Vdc and 2 A for 36 Vdc).

Electrak 10, LA14

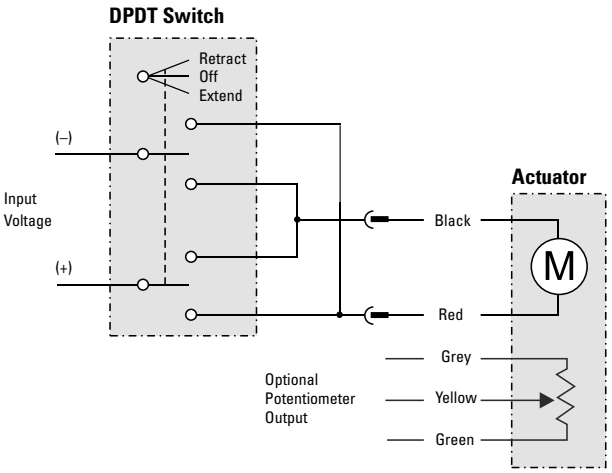

Connect the red lead to positive and black to negative to extend the actuator. Change polarity to retract the actuator. The potentiometer output has 0 ohm between grey and yellow when the actuator is fully extended.

Electrak 050

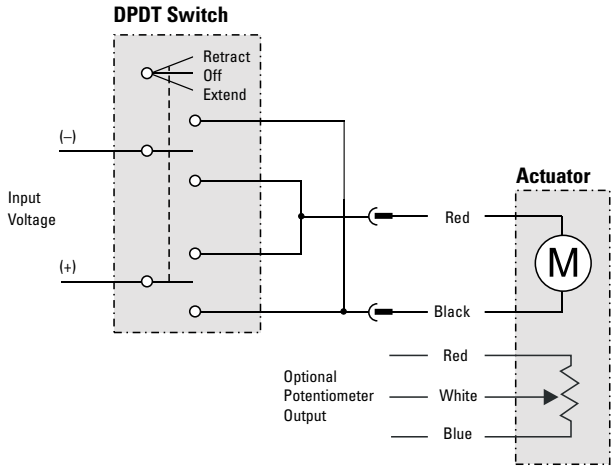

Connect the black lead to positive and red to negative to extend the actuator. Change polarity to retract the actuator. The potentiometer output has 0 ohm between white and red when the actuator is fully retracted.

Electrak Pro

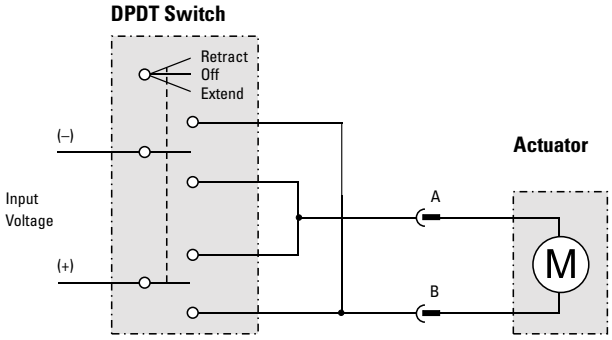

Connect pin B in the connector to positive and A to negative to extend the actuator. Change polarity to retract the actuator. Consult the actuator manual for information on the wiring of the control options.

Electrical Wiring Diagrams

DC-actuators

Electrak PPA-DC

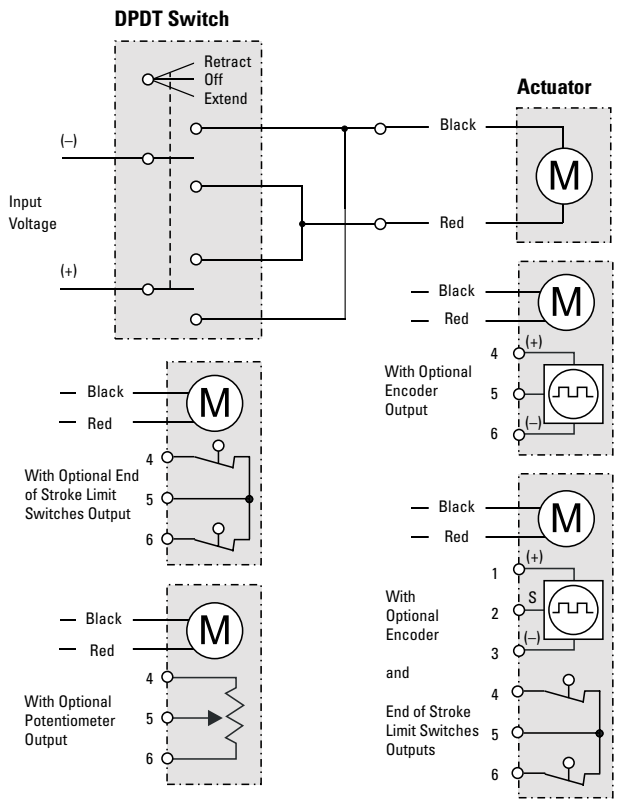

Connect the black lead to positive and red to negative to extend the actuator. Change polarity to retract the actuator. The encoder is supplied with 4,5 - 12 Vdc between terminals 4 or 1 and 6 or 3 and the pulse train signal is generated on terminal 5 or 2. The potentiometer output has 0 ohm between terminal 4 and 5 when the actuator is fully retracted.

DMD

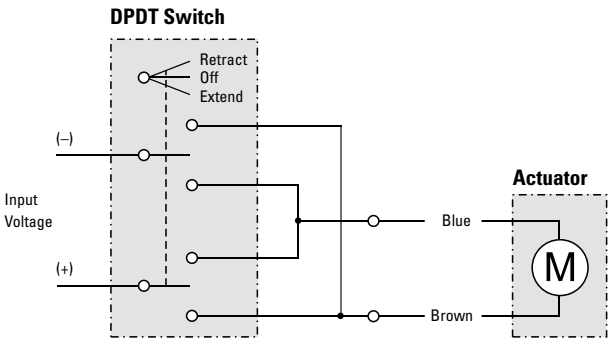

Connect the brown lead to positive and blue to negative to extend the actuator. Change polarity to retract the actuator.

TC16, LM80-H, LM80-V and LM80-I

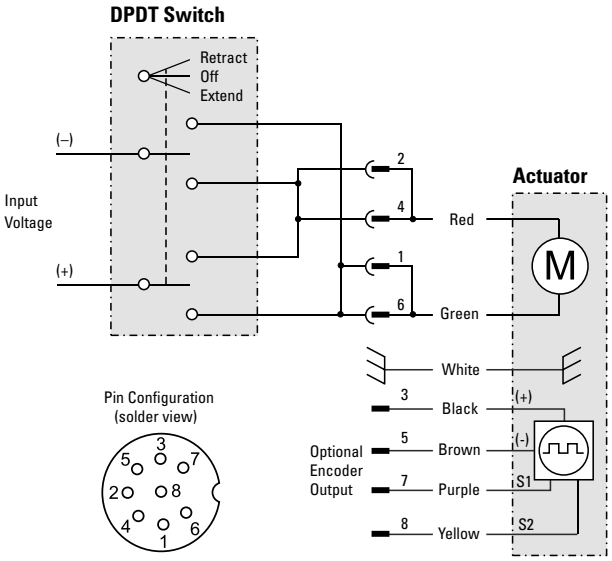

Connect the green lead to positive and red to negative to extend the actuator. Change polarity to retract the actuator. If using the connector supplied with the actuator, each motor lead must be connected to two pins in the connector. The encoder is supplied with 5 - 18 Vdc on pin 3 and 5 and the two pulse train signals are generated on pin 7 and 8.

Electrical Wiring Diagrams

AC-actuators

Electrak 5, LA24 and DMA - 1 × 230 Vac

Without anti coast brake*

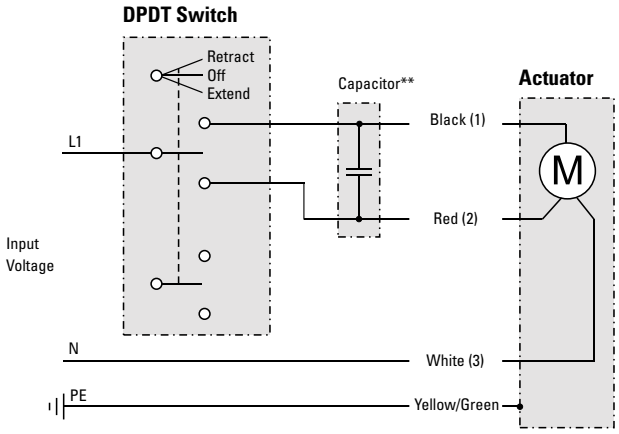

With anti coast brake*

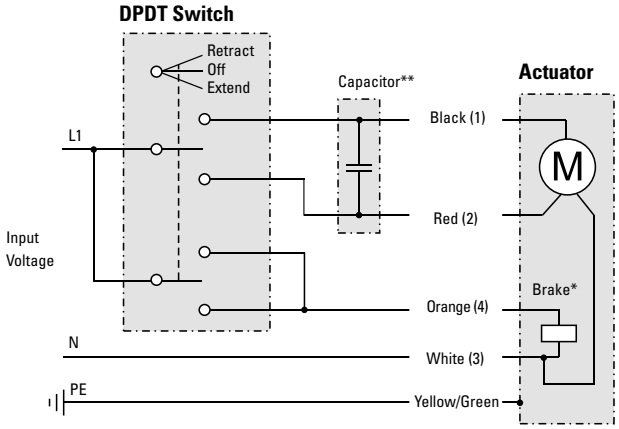

* Anti coast brake is standard on Electrak 5 / LA24 for ball screw models and optional for acme screw models.On DMA there are no anti coast brake on acme models while ball screw models always are equipped with an anti coast brake.
** 10 µF capacitor required to run the actuator, p/n 9200-448-003.

Leads can be either color or number marked. Connect black (1) lead to L1 and white (3) lead to N (neutral) to retract the actuator. Change L1 from lead black (1) to lead red (2) to extend the actuator. If the actuator is equipped with an anti coast brake, release the brake by connecting orange (4) lead lead to L1.

Electrak 5, LA24 and DMA - 3 × 400 Vac

Without anti coast brake*

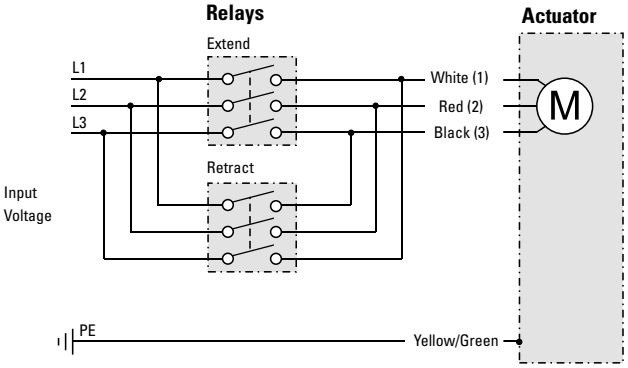

With anti coast brake*

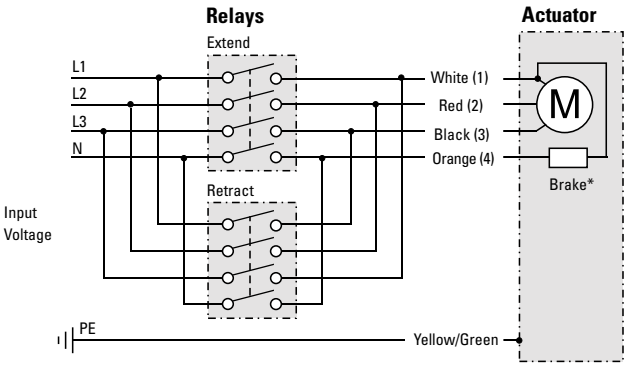

* Anti coast brake is optional on Electrak 5 / LA24 on both acme and ball screw models. On DMA there are no anti coast brake on acme models while ball screw models always are equipped with an anti coast brake.

Leads can be either color or number marked. Connect white (1) lead to L1, red (2) lead to L2 and black (3) lead to L3 to extend the actuator. Change the places of white (2) lead and black (3) to to retract the actuator. If the actuator is equipped with an anti coast brake, release the brake by connecting orange (4) lead to N (neutral).

- page intentionally left blank -

Actuator Controls

General

Whether you plan to operate from a simple pushbutton or a programmable controller, Thomson controls can make your system easy to design, install and operate. Designed to drive actuators, the controls on the following pages are equipped either with easy to use terminal strips or plugs compatible with the actuators for ease of wiring. The controls can be operated manually via external push buttons/switches, hand held pendants or from electronic controls such as a PLC. We also have other actuator controls which may meet your particular needs. Contact customer service if you don't see the right control for your application.

Actuator Controls

Switches

DPDT Switch

- Robust switch
- Double pole, double throw (DPDT)
- 15 A rating at 270 Vac
- Center "off"
- Two momentary contacts
- Wiring diagram on label

Specifications

Parameter		DPDT Switch
Maximum voltage	[Vac]	270
Maximum current	[A]	15
Part number		830-8004-016

Actuator Compatibility

Electrak 1, Electrak 1SP, Electrak 050, Electrak PPA-DC, Electrak 10, Electrak LA14, Electrak Pro, Electrak 5, Electrak LA24, TC16, DMD, DMA, LM80-H, LM80-V, LM80-I, DGB

Wiring Diagram

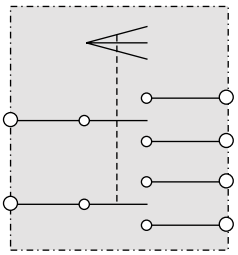

Dimensions

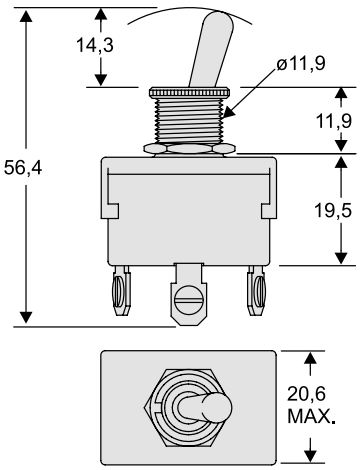

! Note: sometimes the switch can manage higher current than the actuator and sometimes it is the other way around. Always make sure that both the switch and the actuator can manage the current that the application require.

Actuator Controls

Electronic Controls

Control AC-063

- Rugged and robust control designed to operate under the hardest conditions
- Auto shut off function if the current or duty cycle limits of the control is exceeded.
- Robust plastic enclosure
- Versions for DC or AC supply voltage
- Versions with or without limit switch inputs
- Versions with or without control pendant

Actuator Compatibility

AC-063B	Electrak PPA-DC, Electrak 10, Electrak LA14, Electrak Pro, DMD
AC-063BC	Electrak PPA-DC, Electrak 10, Electrak LA14, Electrak Pro, DMD
AC-063C	Electrak PPA-DC, Electrak 10, Electrak LA14, Electrak Pro, DMD

! Note: sometimes the control can manage higher current and/or duty cycle than the actuator and sometimes it is the other way around. Always make sure that both the control and the actuator can manage the current and duty cycle that the application require.

Dimensions

AC-063B

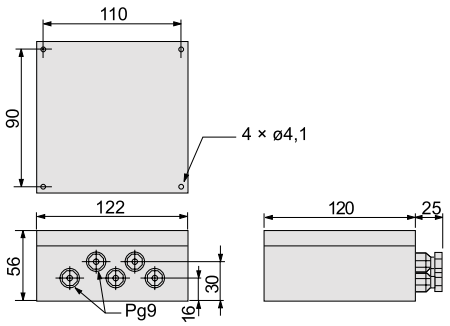

AC-063BC

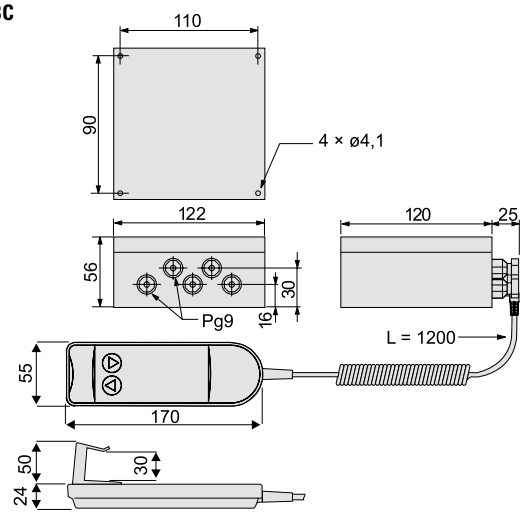

AC-063C

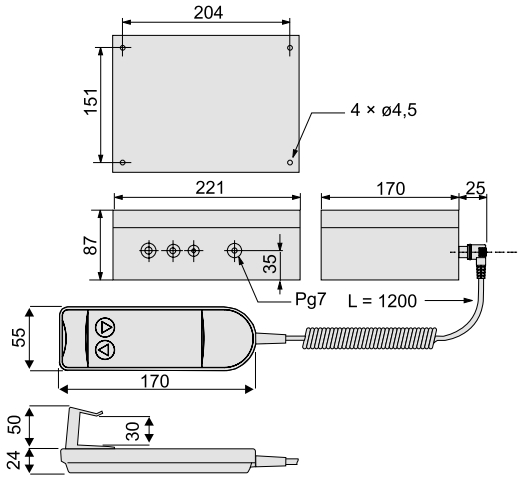

Actuator Controls

Electronic Controls

Control AC-063

Specifications

Parameter		AC-063B		AC-063BC		AC-063C	
Input voltage	[V]						
Vdc		12 – 36	12 – 36	12 – 36	12 – 36	-	-
Vac @ 50 Hz		-	-	-	-	230	230
Output voltage	[Vdc]	12 – 36	12 – 36	12 – 36	12 – 36	24	24
Output current, max.	[A]						
@ 12 Vdc output		30	30	30	30	-	-
@ 24 Vdc output		17	17	17	17	17	17
@ 36 Vdc output		12	12	12	12	-	-
Max. duty cycle @ 25 °C	[%]	10	10	10	10	10	10
Weight of control	[kg]	0,4	0,4	0,4	0,4	3	3
Protection class		IP65	IP65	IP54	IP54	IP54	IP54
Limit switch inputs		no	yes	no	yes	no	yes
Control pendant included		no	no	yes	yes	yes	yes
Certificates		CE	CE	CE	CE	CE	CE
Part number		DC24-1B	DCA24-1B	DC24-1BC	DCA24-1BC	DC24-1C	DCA24-1C

Wiring Diagram

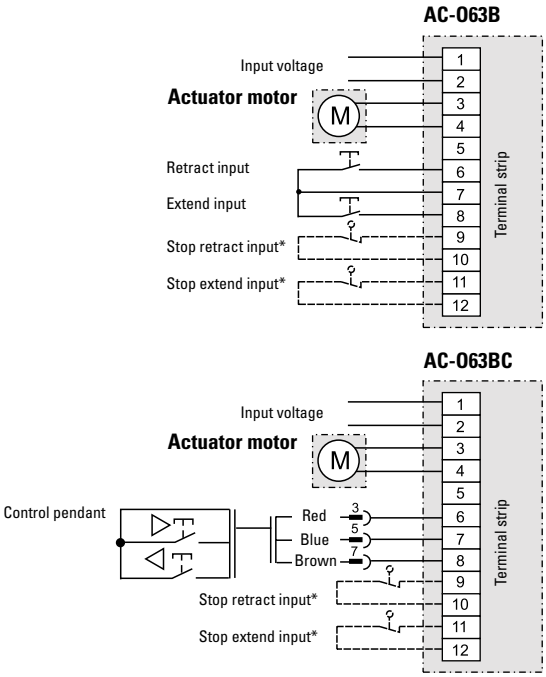

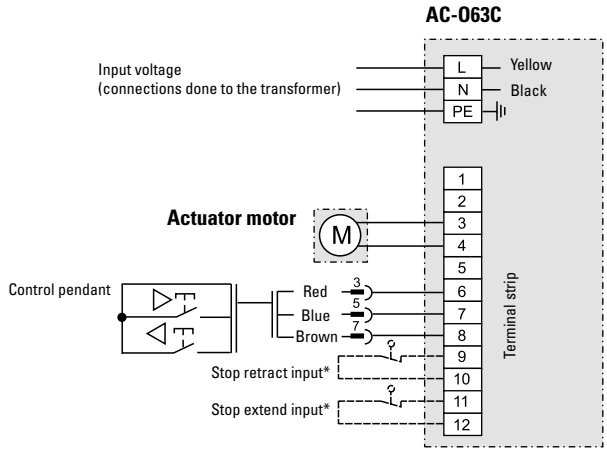

* On models without stop retract and stop extend inputs these terminals are not available.

Actuator Controls

Electronic Controls

Control AC-247 ELS

- Compact, robust and light weight
- Electronic limit switches (ELS) stop the actuator at end of stroke if the actuator runs into an obstacle
- Connector input for DCG14-1H control pendant

Actuator Compatibility

Electrak 1, Electrak 1SP, Electrak 050, LM80-H, LM80-V, LM80-I

Wiring Diagram

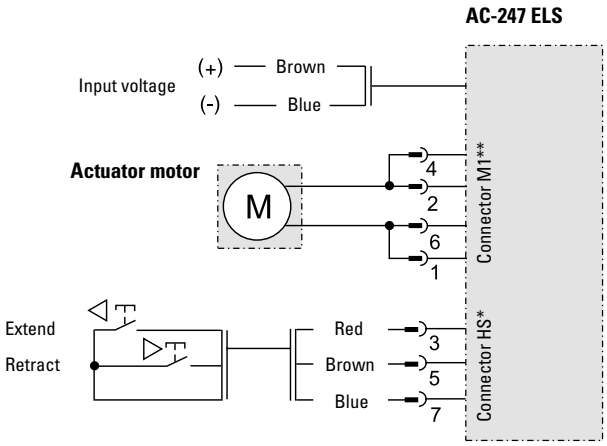

* The diagram shows the control connected to control pendant DCG14-1H, but any type of normally open contacts can be used to control the direction of the actuator.

** Each motor lead must be connected to two pins in the connector in order to not exceed the current limit of the connector.

Dimensions

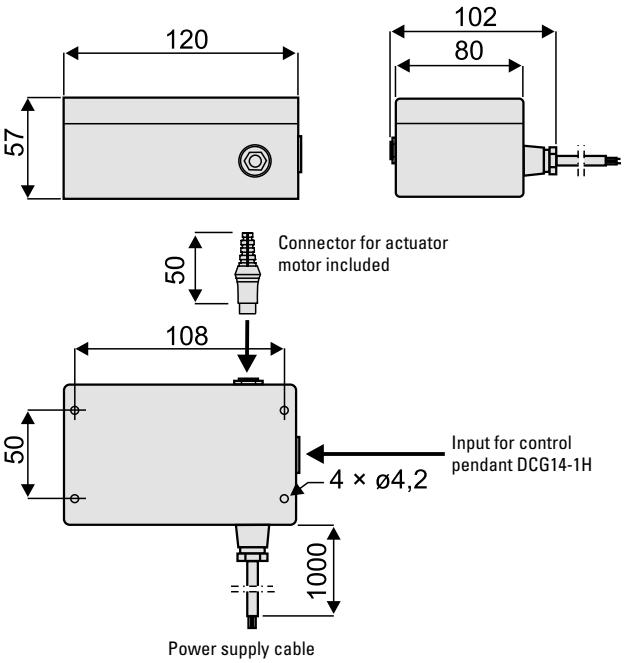

!	Note: sometimes the control can manage higher current and/or duty cycle than the actuator and sometimes it is the other way around. Always make sure that both the control and the actuator can manage the current and duty cycle that the application require.

Actuator Controls

Electronic Controls

Control AC-247 ELS

Specifications

Parameter		AC-247 ELS	AC-247 ELS	AC-247 ELS
Input voltage	[Vdc]	12 or 24	12	24
Output voltage	[Vdc]	12 or 24	12	24
Output current, max. @ 12 Vdc output @ 24 Vdc output	[A]	 10 5	 12 -	 - 8
Max. duty cycle @ 25 °C	[%]	10	10	10
Weight of control	[kg]	0,3	0,3	0,3
Protection class		IP54	IP54	IP54
Electronic limit switches		yes	yes	yes
Connector for control pendant		yes[1]	yes[1]	yes[1]
Control pendant included[1]		no	no	no
Certificates		CE	CE	CE
Part number		D604 110	D604 111	D604 112

[1]Control pendant type DCG14-1H is recommended, see page 56.

Actuator Controls

Electronic Controls

Control DCG

- Controls available for single actuator operation or synchronous operation of two actuators equipped with encoders.
- Small and light weight control operated via a control pendant which is ordered separately
- Built in Electronic Limit Switches (ELS) stop the actuator automatically at end of stroke or mid stroke stall
- The control pendant is ordered separately
- The "Control to Actuator" cable is ordered separately and comes in several version depending of the type of actuator being used

Actuator Compatibility

DCG-150	Electrak 1, Electrak 1SP, Electrak 050[1]
DCG-160	LM80-V
DCG-170	LM80-H
DCG-180	TC16, LM80-I
DCG-190	Electrak PPA-DC, Electrak 10, Electrak LA14, DMD[2]
DCG-260	Synchronous operation of two LM80-I[3]
DCG-280	Synchronous operation of two TC16[3]

[1] This control do not work with Electrak 050 that has the limit switch option ("FS" or "PF" option).
[2] Note that the maximum current output of the control is 13 A while some of these actuators can, depending of the load and model being used, draw more current.
[3] The units must be equipped with encoders.

!	Note: sometimes the control can manage higher current and/or duty cycle than the actuator and sometimes it is the other way around. Always make sure that both the control and the actuator can manage the current and duty cycle that the application require.

Dimensions

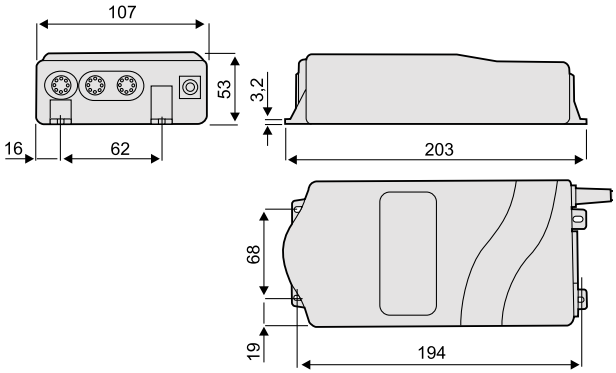

Wiring Diagram

No wiring is necessary to the control. All connections are done through plugs.

Actuator Controls

Electronic Controls

Control DCG

Specifications

Parameter		DCG-150	DCG-160	DCG-170	DCG-180	DCG-190	DCG-260 [5]	DCG-280 [7]
Input voltage [1]	[Vac]	1 × 230 ± 6%	1 × 230 ± 6%	1 × 230 ± 6%	1 × 230 ± 6%	1 × 230 ± 6%	1 × 230 ± 6%	1 × 230 ± 6%
Input frequency	[Hz]	50/60	50/60	50/60	50/60	50/60	50/60	50/60
Output voltage	[Vdc]	24	24	24	24	24	24	24
Output current, max.[2]	[A]	4	8	8	8	13	2 × 8	2 × 8
Operating temperature limits	[°C]	+5 – +45	+5 – +45	+5 – +45	+5 – +45	+5 – +45	+5 – +45	+5 – +45
Max. duty cycle @ 25 °C [3]	[%]	10	10	10	10	10	10	10
Maximum on time	[s]	60	120	120	60	60	60	60
Weight of control	[kg]	1,9	1,9	1,9	1,9	1,9	1,9	1,9
Protection class		double insulated	double insulated	double insulated	double insulated	double insulated	double insulated	double insulated
Electronic limit switches		yes	yes	yes	yes	yes	yes[6]	yes[6]
Included control pendant [4]		no	no	no	no	no	no	no
Certificates		CE	CE	CE	CE	CE	CE	CE
Part number		DCG24-1M-0150	DCG24-1M-0160	DCG24-1M-0170	DCG24-1M-0180	DCG24-1M-0190	DCG24-2M-0260	DCG24-2M-0280

[1] 115 Vac input voltage also available. Contact customer support.

[2] These controls are current limited. Review the current/load curves for the actuator you selected to make sure the control will provide enough current for the thrust you need. You may need to select one of the AC-063 or AC-247 ELS controls.

[3] Control will shut off if duty cycle is exceeded and automatically reset when cooled off.

[4] Control pendant type DCG14-1H is recommended, see page 56.

[5] Control for synchronous operation of two LM80-I rodless actuators. Contact customer support for information on synchronous operation of other actuator models.

[6] DCG-260 / DCG-280 uses a pulse counting function instead of current sensing to determine if the actuator is moving at the correct speed. If the pulses arrives too slowly or not at all the control will stop the motion of both actuators.

[7] Control for synchronous operation of two TC16 lifting columns. Contact customer support for information on synchronous operation of other actuator models.

Actuator Controls

Control Accessories

DCG Control Pendant

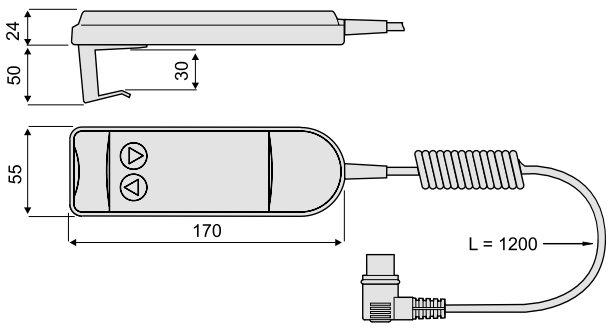

Specifications

Parameter		DCG14-1H
Weight	[kg]	0,4
Cable length	[mm]	1200
Certificates		CE
Part number		DCG14-1H

- Handy and light weight control pendant with spiral cord cable which connects to the DCG, AC-063 (possible on BC and C versions only) and AC-247 ELS control pendant input with a plug

Control to Control Cable for DCG, AC-063 and AC-247 ELS Controls

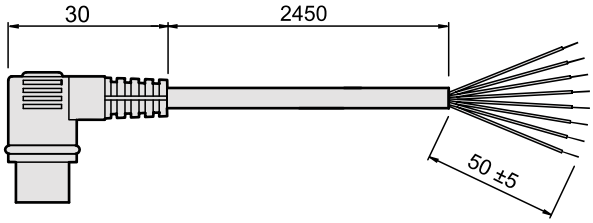

Specifications

Parameter		
Lead cross section	[mm²]	7 × 0,14
Cable length	[mm]	2450
Part number		D620 095

- This cable connects with its plug to the control pendant input on DCG, AC-063 (possible on BC and C versions only) and AC-247 ELS in order to connect the control to another device than the DCG control pendant

Actuator Controls

Control Accessories

Control to Actuator Cables with Double Connectors for DCG Controls

Electrak 1, Electrak 1SP, Electrak 050

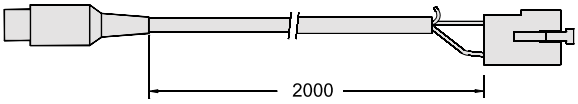

Electrak 10

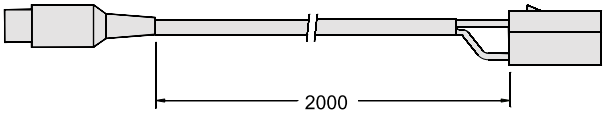

• Connects the DCG control to actuators with connector

Specifications

Parameter		
Lead cross section	[mm²]	1,5
Cable length	[mm]	2000
Part number		
Electrak 1, Electrak 1SP, Electrak 050		D620 155
Electrak 10, Electrak LA14		D620 156
DMD*		-
TC16**		-
LM80-V, LM80-H, LM80-I**		-

* Use the "Single Connector" cable below as DMD has no connector.
** These units do not require a control to actuator cable as the connector on the actuator cable can be directly plugged in to the control.

Control to Actuator Cables with Single Connector for DCG Controls

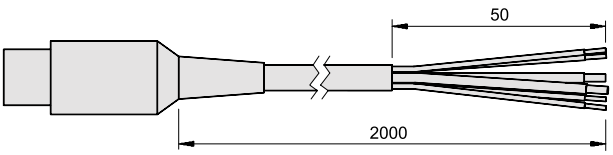

• Connects the DCG control to actuators without connector

Specifications

Parameter		
Lead cross section	[mm²]	4 × 0,25 + 2 × 1,5
Cable length	[mm]	2000
Part number		D620 143

Accessories and Spare Parts

Mounting Components

Mounting Pin Kits

Designation	Compatible Actuators	A [mm]	Part Number
Mounting pins (pair)	Electrak 10, Electrak 5	12,7	D603 028
Mounting pins (pair)	Electrak LA14, LA24, FA14	12	D603 023

The mounting pins are used in the rear and front adapter holes of the actuator. The pins have a groove in each end so that it can be secured with snap rings.

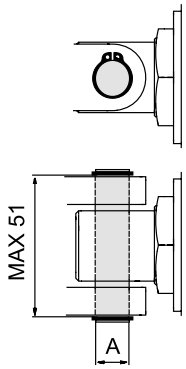

Mounting Pin Bracket Kits

Designation	Compatible Actuators	Part Number
Mounting pin brackets (pair)	Electrak LA14, LA24, FA14	D603 029

The mounting pin brackets are used to attach the front and rear adapter via a pair of mounting pins to the objects to which it is mounted. Note! one pair of brackets is needed per adapter as there must be a bracket on each side of the adapter.

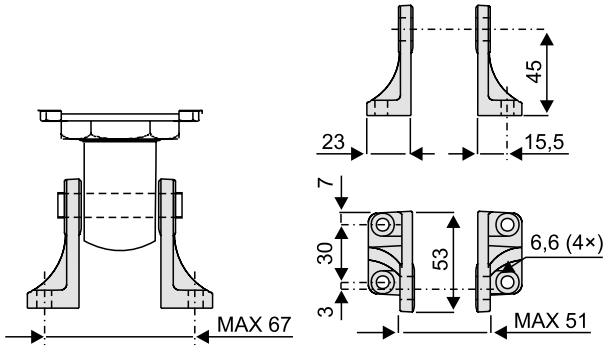

T-slot Bolt

Designation	Compatible Actuators	Part Number
M10 T-slot bolt	DMD, DMA	D800041

The T-slot bolt fits in to the T-slot running along the outer profile of DMD and DMA lifting columns. The T-slot bolts can be used to mount the unit instead of using the upper mounting plate, or/and for attaching other components to the profile.

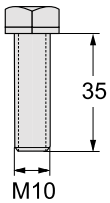

Accessories and Spare Parts

Mounting Components

T-slot Mounting Kit

Designation	Compatible Actuators	Part Number
M8 T-slot mounting kit	LM80-H, LM80-V, LM80-I	D680507

The T-slot mounting kit consists of four T-slot bolts, washers and nuts that fit in to the T-slot running along the profile of LM80 rodless actuators. The T-slot mounting kit can be used to mount the unit or/and for attaching other components to the profile.

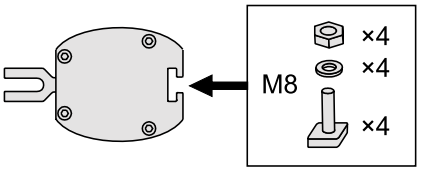

Trunnion Mounting Kits

Designation	Compatible Actuators	Part Number
Trunnions (pair)	Electrak LA14, LA24, FA14	D603 022
Trunnion brackets (pair)	Electrak LA14, LA24, FA14	D603 030

The trunnions can be mounted to the T-slot running along the right and left side of the cover tube on an Electrak LA14, LA24 or FA14.

Trunnions

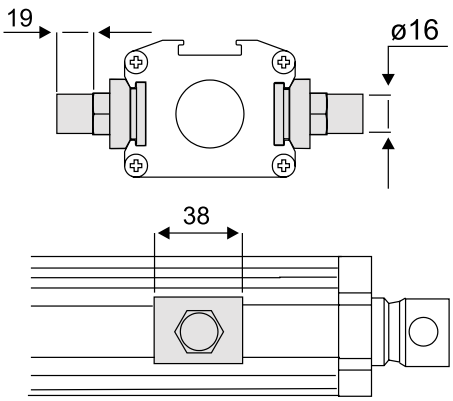

Trunnion Brackets

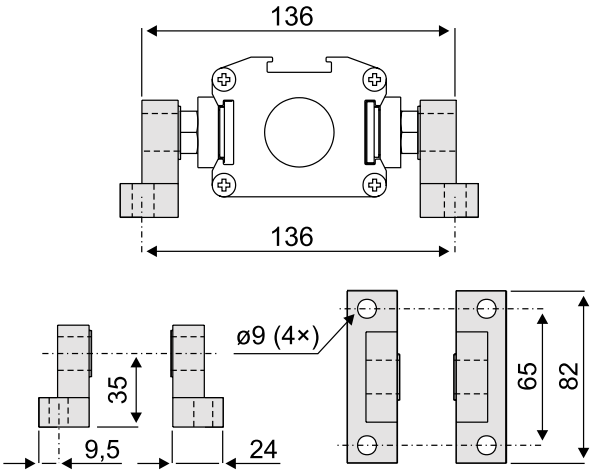

Accessories and Spare Parts

Mounting Components

PPA Rear Clevis Mounting Kits

Designation	Compatible Actuators	Part Number
PPA rear clevis mounting kit for DC actuators	Electrak PPA-DC	7827320
PPA rear clevis mounting kit	Electrak PPA-DC	7824295

The rear clevis mounting kits are attached to the tube of an Electrak PPA actuator allowing the actuator to be mounted clevis to clevis style. Note that one of the kits fits both PPA-DC and PPA-AC actuators while the other only fits PPA-DC actuators.

PPA Rear Clevis Mounting Kit

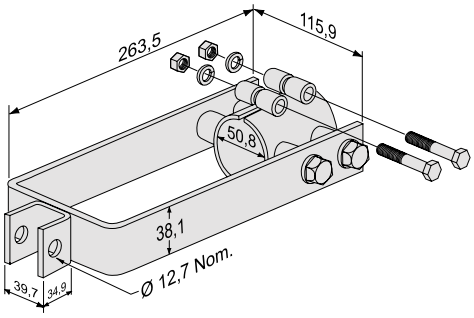

PPA Rear Clevis Mounting Kit for DC Actuators

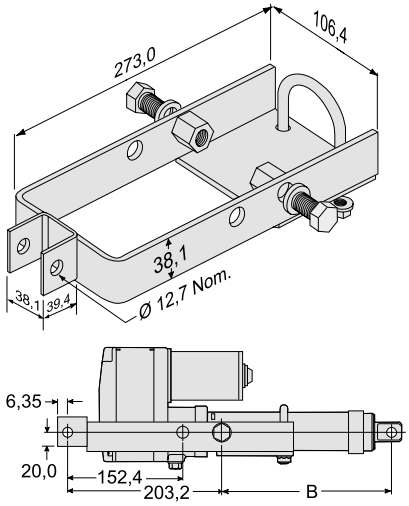

B: retracted length to trunnion, also see product pages.

PPA Tube Mounting Kits

Designation	Compatible Actuators	Part Number
Electrak PPA tube mount - light duty 3330 N	Electrak PPA-DC	7822520
Electrak PPA tube mount - heavy duty 6670 N	Electrak PPA-DC	7821783

The tube mounting kits work as a clamp that is mounted at any desired position along the actuator tube. Trunnion pins for the tube mount clamp are supplied and mounted by the customer.

Electrak PPA Tube Mount - Light Duty 3330 N

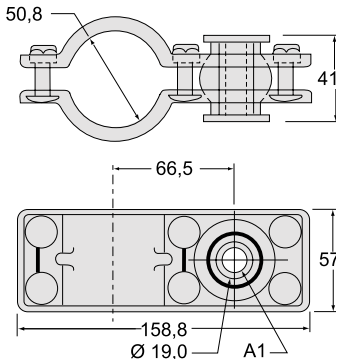

A1: hole diameter 12,7 with bushing.

Electrak PPA Tube Mount - Heavy Duty 6670 N

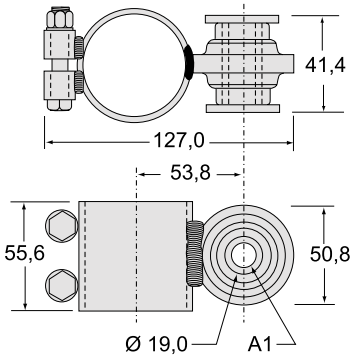

A1: hole diameter 12,7 with bushing.

Accessories and Spare Parts

Electrical Components

Capacitor Kits

Designation	Compatible Actuators	Actuator Supply Voltage	Part Number
Capacitor kit	Electrak 5, LA24, DMA	115 Vac	9200-448-002
Capacitor kit	Electrak 5, LA24, DMA	230 Vac	9200-448-003

All 230 and 115 Vac actuators require a capacitor to be wired between the windings to run. The capacitor needs to be mounted externally by the customer. Also see the Electrical Wiring Diagrams section.

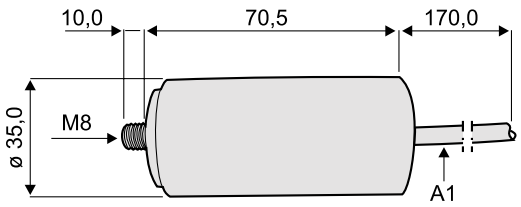

A1: cable 2 × 0,75 mm²

Magnetic Sensor

Designation	Compatible Actuators	Contact Type	Part Number
Magnetic sensor	Electrak LA14, LA24, FA14	normally open	D535 070
Magnetic sensor	Electrak LA14, LA24, FA14	normally closed	D535 071

Specifications

Parameter		
Maximum power	[W]	10
Maximum voltage	[Vdc]	43
Maximum current	[A]	0,5
Maximum contact resistance	[ohm]	0,2
Lead cross section	[mm²]	2 × 0,12
Cable length	[mm]	3000
Protection class		IP67

The magnetic sensor fits in to the T-slot running along three sides of the cover tube on an Electrak LA14, LA24 or FA14. The normally closed sensors can be used with AC-063 controls that have limit switch inputs. The cable is molded into the switch.

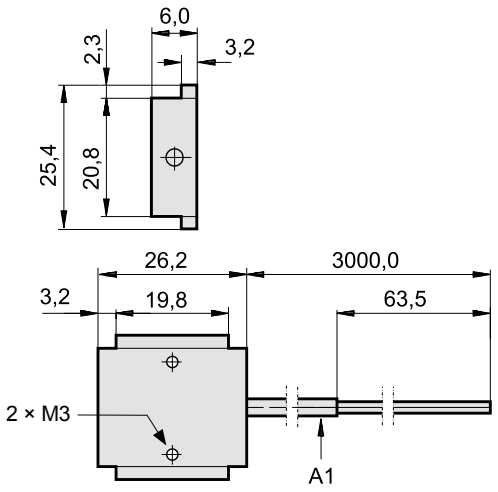

A1: cable 2 × 0,12 mm²

Accessories and Spare Parts

Electrical Components

Limit Switches

Designation	Cable Length	Part Number
Limit switch	1 m	671 545 0281
Limit switch	5 m	671 545 0290
Limit switch	10 m	671 545 0299

Specifications

Parameter		
Maximum voltage	[V]	240
Maximum current	[A]	1,5
Lead cross section	[mm²]	5 × 0,75
Contact type		1 NO + 1 NC
Protection class		IP67

The limit switches can be used with AC-063 controls that have limit switch inputs. The cable is molded into the switch.

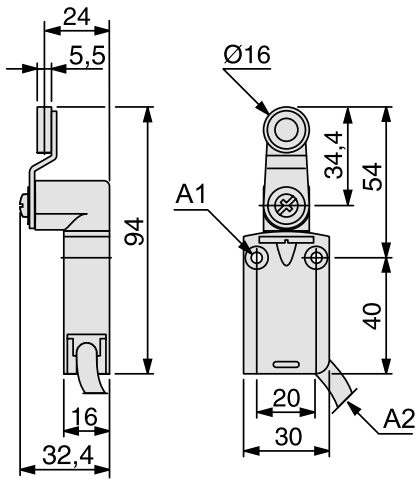

A1: 2 × mounting holes ø 4,2, counterbored ø 8 mm by 4 mm deep
A2: cable ø 7,5 mm

Electrak Pro Programming Unit

Designation	Part Number
Programming Unit	9200-101-051

If an Electrak Pro actuator is equipped with the programmable limit switch option the programming unit is necessary to be able to program the limit switch positions. The unit comes with a 4 meter long cable with connectors in both ends.

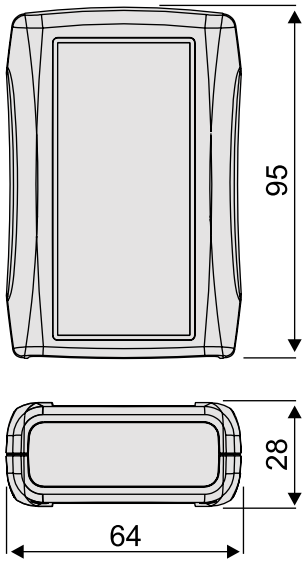

Accessories and Spare Parts

Spare Parts

Electrak Pro Spare Parts

Designation	Part Number
Electrak Pro mating connector, standard (grey seal)	9200-101-042
Electrak Pro mating connector with 1 m pigtail	9200-101-043
Electrak Pro mating connector, heavy gauge wire (blue seal)	9200-101-046
Electrak Pro manual override seal	9200-680-001

Ordering Keys

Electrak DC-actuators

Electrak 1

1	2	3
S24 -	09A04 -	06
1. Model and input voltage S12 - = Electrak 1, 12 Vdc S24 - = Electrak 1, 24 Vdc S36 - = Electrak 1, 36 Vdc	**2. Dynamic load capacity and max. speed** 09A04 = 110 N, 75 mm/s 09A08 = 225 N, 45 mm/s 17A08 = 340 N, 26 mm/s 17A16 = 340 N, 14 mm/s	**3. Electrical stroke (actual stroke in mm)** 01 = 1 inch (20,8 mm) 02 = 2 inch (46,2 mm) 03 = 3 inch (71,6 mm) 04 = 4 inch (97,0 mm) 05 = 5 inch (122,4 mm) 06 = 6 inch (147,8 mm)

Electrak 1SP

1	2	3
SP24 -	09A04 -	06
1. Model and input voltage SP12 - = Electrak 1SP, 12 Vdc SP24 - = Electrak 1SP, 24 Vdc SP36 - = Electrak 1SP, 36 Vdc	**2. Dynamic load capacity and max. speed** 09A04 = 110 N, 75 mm/s 09A08 = 225 N, 45 mm/s 17A08 = 340 N, 26 mm/s 17A16 = 340 N, 16 mm/s[1]	**3. Ordering stroke (actual stroke in mm)** 02 = 2 inch (58,7 mm) 04 = 4 inch (115,1 mm) 06 = 6 inch (171,5 mm) [1]Not possible in combination with 6 inch stroke.

Ordering Keys

Electrak DC-actuators

Electrak 050

1	2	3	4
DE24 -	17W44M	15	FS

1. Model and input voltage
DE12 - = Electrak 050, 12 Vdc
DE24 - = Electrak 050, 24 Vdc
DE36 - = Electrak 050, 36 Vdc
DE24Q = Electrak 050, 24 Vdc, Q-version[1]

2. Dynamic load capacity and color
17W41M = 510 N, black housing
17W42M = 275 N, black housing
17W44M = 140 N, black housing
17W41W = 510 N, white housing[1]
17W42W = 275 N, white housing[1]
17W44W = 140 N, white housing[1]

3. Stroke
02 = 25 mm
05 = 50 mm
07 = 75 mm
10 = 100 mm
12 = 125 mm
15 = 150 mm
17 = 175 mm
20 = 200 mm

4. End of stroke limit switches and potentiometer
FS = limit switches and no potentiometer
PO = potentiometer[2]
PF = limit switches and potentiometer[2]
MF = crossholes rotated 90° and limit switches
MP = crossholes rotated 90° and potentiometer[2]

[1] White housing is standard for the Q-version.
[2] Not possible in combination with 200 mm stroke.

Electrak PPA-DC

1	2	3	4	5	6
PPA24 -	58B65 -	18	N -	LS	X

1. Model and input voltage
PPA12 - = Electrak PPA-DC, 12 Vdc
PPA24 - = Electrak PPA-DC, 24 Vdc
PPA36 - = Electrak PPA-DC, 36 Vdc

2. Dynamic load capacity
18B65 - = 3330 N
58B65 - = 6670 N

3. Stroke
04 = 4 inch (101,6 mm)
08 = 8 inch (203,2 mm)
12 = 12 inch (304,8 mm)
18 = 18 inch (457,2 mm)
24 = 24 inch (609,6 mm)
36 = 36 inch (914,4 mm)

4. Brake option
N - = no brake option

5. Feedback option
XX = no feedback option
LS = end of stroke limit switches
PO = potentiometer[1]
HS = encoder
HL = encoder + end of stroke limit switches

6. Bellows option
X = no bellows
C = bellows

[1] Not available with limit switches.

Ordering Keys

Electrak DC-actuators

Electrak 10

1	2	3	4	5
D12 -	20B5 -	04	M0	N

1. Input voltage
D12 - = 12 Vdc
D24 - = 24 Vdc
D36 - = 36 Vdc

2. Dynamic load capacity, screw type and maximum speed
05A5 - = 1100 N, acme, 54 mm/s
10A5 - = 2250 N, acme, 30 mm/s
20A5 - = 2250 N, acme, 15 mm/s
05B5 - = 2250 N, ball, 61 mm/s
10B5 - = 4500 N, ball, 30 mm/s
20B5 - = 4500 N, ball, 15 mm/s
21B5 - = 6800 N, ball, 15 mm/s

3. Stroke
04 = 4 inch (101,6 mm)
06 = 6 inch (152,4 mm)
08 = 8 inch (203,2 mm)
10 = 10 inch (254,0 mm)
12 = 12 inch (304,8 mm)
14 = 14 inch (355,6 mm)
16 = 16 inch (406,4 mm)
18 = 18 inch (457,2 mm)
20 = 20 inch (508,0 mm)
24 = 24 inch (609,6 mm)

4. Rear adapter hole position[1]
M0 = adaptor at 0° (standard position)
M1 = adaptor at 30°
M2 = adaptor at 60°
M3 = adaptor at 90°
M4 = adaptor at 120°
M5 = adaptor at 150°

5. Options
N = no option
NPO = potentiometer
NHW = manual override[2]

[1] Definition of rear adapter hole positions.

M0 - M5

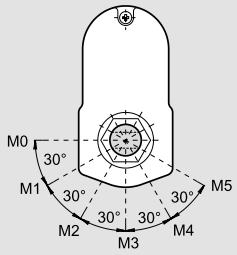

[2] Dimensions for manual override option.

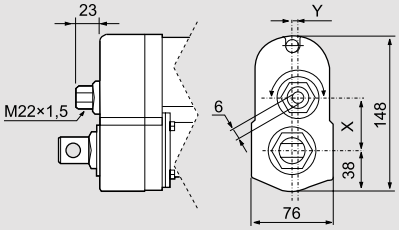

Model	X	Y
05A(B)5 -	49,6	0,0
10A(B)5 -	43,3	5,2
20(21)A(B)5 -	38,9	0,0

Ordering Keys

Electrak DC-actuators

Electrak LA14

1	2	3	4	5
DA12 -	10A65M	15	M0	N

1. Input voltage
DA12 - = 12 Vdc
DA24 - = 24 Vdc
DA36 - = 36 Vdc

2. Dynamic load capacity, screw type and maximum speed
05A65M = 1100 N, acme, 54 mm/s
10A65M = 2250 N, acme, 30 mm/s
20A65M = 2250 N, acme, 15 mm/s
05B65M = 2250 N, ball, 61 mm/s
10B65M = 4500 N, ball, 30 mm/s
20B65M = 4500 N, ball, 15 mm/s
21B65M = 6800 N, ball, 15 mm/s

3. Stroke
05 = 50 mm
10 = 100 mm
15 = 150 mm
20 = 200 mm
25 = 250 mm
30 = 300 mm
35 = 350 mm
40 = 400 mm
45 = 450 mm
50 = 500 mm
55 = 550 mm
60 = 600 mm

4. Rear / front adapter hole position[1]
M0 = both adaptors at 0° (standard position)
M1 = rear adaptor at 30°, front at 0°
M2 = rear adaptor at 60°, front at 0°
M3 = rear adaptor at 90°, front at 0°
M4 = rear adaptor at 120°, front at 0°
M5 = rear adaptor at 150°, front at 0°
MF = rear and front adaptor at 90°

5. Options
N = no option
NPO = potentiometer
NHW = manual override[2]

[1] Definition of adapter hole positions.

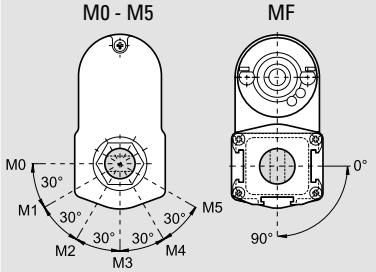

[2] Dimensions for manual override option.

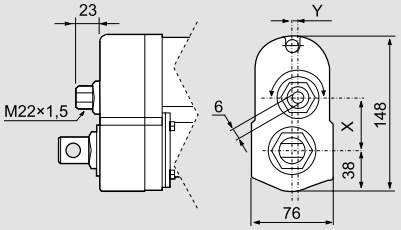

Model	X	Y
05A(B)65M	49,6	0,0
10A(B)65M	43,3	5,2
20(21)A(B)65M	38,9	0,0

Ordering Keys

Electrak DC-actuators

Electrak Pro

1	2	3	4	5	6	7
PR24	10-4B65	D	10	R	C	S

1. Model and input voltage
PR12 = Electrak Pro, 12 Vdc
PR24 = Electrak Pro, 24 Vdc

2. Dynamic load capacity and screw type
02-2A65 = 1100 N, acme
05-4A65 = 2250 N, acme
07-8A65 = 3375 N, acme
05-2B65 = 2250 N, ball
10-4B65 = 4500 N, ball

3. Protection class
D = IP66 (standard)
G = IP67

4. Stroke
05 = 50 mm
10 = 100 mm
15 = 150 mm
20 = 200 mm
30 = 300 mm

5. Control PCB options
S = electronic load monitoring, ELM (standard)
D = ELM + encoder
L = ELM + linear potentiometer[1]
P = ELM + programmable limit switches [1]
T = ELM + low level power switching
R = ELM + end of stroke indication outputs[1]
U = ELM + ELM trip indication output
K = ELM + signal follower input[1]

6. Front adapter hole and anti-rotation options[2]
C = freely rotatable cross hole, no anti-rotation
S = adapter hole in standard position, anti-rotation[3]
M = adapter hole rotated 90°, anti-rotation[3]
R = rod end, anti-rotation[3]

7. Finish
S = no paint (standard)
B = actuator painted black

[1] Ball screw units require anti-rotation, optional for acme screw units (specify option S, M, C or R in position 6).
[2] Other front adapters possible on request, contact customer support.
[3] Definition of adapter hole positions.

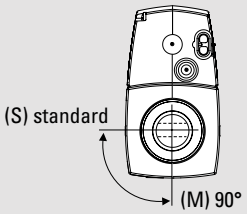

Ordering Keys

Electrak AC-actuators

Electrak 5

1	2	3	4	5
A22 -	20B5 -	04	M0	BPO

1. Input voltage
A22 - = 1 × 230 Vac
A42 - = 3 × 400 Vac

2. Dynamic load capacity, screw type and maximum speed
05A5 - = 1100 N, acme, 54 mm/s[1]
10A5 - = 2250 N, acme, 30 mm/s
20A5 - = 2250 N, acme, 15 mm/s
05B5 - = 2250 N, ball, 61 mm/s
10B5 - = 4500 N, ball, 30 mm/s
20B5 - = 4500 N, ball, 15 mm/s
21B5 - = 6800 N, ball, 15 mm/s

3. Stroke
04 = 4 inch (101,6 mm)
06 = 6 inch (152,4 mm)
08 = 8 inch (203,2 mm)
10 = 10 inch (254,0 mm)
12 = 12 inch (304,8 mm)
14 = 14 inch (355,6 mm)
16 = 16 inch (406,4 mm)
18 = 18 inch (457,2 mm)
20 = 20 inch (508,0 mm)
24 = 24 inch (609,6 mm)

4. Rear adapter hole position[2]
M0 = adaptor at 0° (standard position)
M1 = adaptor at 30°
M2 = adaptor at 60°
M3 = adaptor at 90°
M4 = adaptor at 120°
M5 = adaptor at 150°

5. Options[3]
N = no option
B = anti coast brake[3]
NPO = potentiometer
NHW = manual override[4]
BPO = anti coast brake and potentiometer[3]
BHW = anti coast brake and manual override[3/4]

[1] 05A5 - not possible with 400 Vac input voltage.
[2] Definition of rear adapter hole positions.

M0 - M5

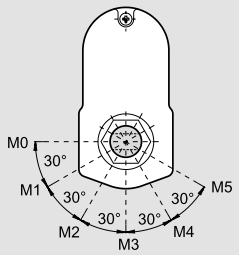

[3] Ball screw versions must always be ordered with an anti coast brake while acme versions can be ordered with or without an anti coast brake.
[4] Dimensions for manual override option.

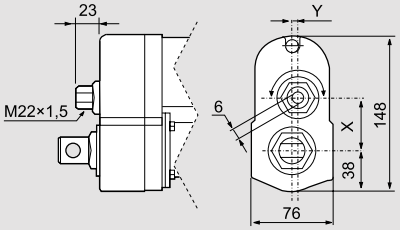

Model	X	Y
05A(B)5 -	49,6	0,0
10A(B)5 -	43,3	5,2
20(21)A(B)5 -	38,9	0,0

Ordering Keys

Electrak AC-actuators

Electrak LA24

1	2	3	4	5
AA22 -	20B65M	05	MF	BPO

1. Input voltage
AA22 - = 1 × 230 Vac
AA42 - = 3 × 400 Vac

2. Dynamic load capacity, screw type and maximum speed
05A65M = 1100 N, acme, 54 mm/s[1]
10A65M = 2250 N, acme, 30 mm/s
20A65M = 2250 N, acme, 15 mm/s
05B65M = 2250 N, ball, 61 mm/s
10B65M = 4500 N, ball, 30 mm/s
20B65M = 4500 N, ball, 15 mm/s
21B65M = 6800 N, ball, 15 mm/s

3. Stroke
05 = 50 mm
10 = 100 mm
15 = 150 mm
20 = 200 mm
25 = 250 mm
30 = 300 mm
35 = 350 mm
40 = 400 mm
45 = 450 mm
50 = 500 mm
55 = 550 mm
60 = 600 mm

4. Rear / front adapter hole position[2]
M0 = both adaptors at 0° (standard position)
M1 = rear adaptor at 30°, front at 0°
M2 = rear adaptor at 60°, front at 0°
M3 = rear adaptor at 90°, front at 0°
M4 = rear adaptor at 120°, front at 0°
M5 = rear adaptor at 150°, front at 0°
MF = rear and front adaptor at 90°

5. Options[3]
N = no option
B = anti coast brake[3]
NPO = potentiometer
NHW = manual override[4]
BPO = anti coast brake and potentiometer[3]
BHW = anti coast brake and manual override[3/4]

[1] 05A65M not possible with 400 Vac input voltage.
[2] Definition of adapter hole positions.

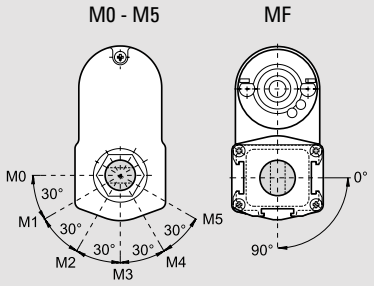

[3] Ball screw versions must always be ordered with an anti coast brake while acme versions can be ordered with or without an anti coast brake.
[4] Dimensions for manual override option.

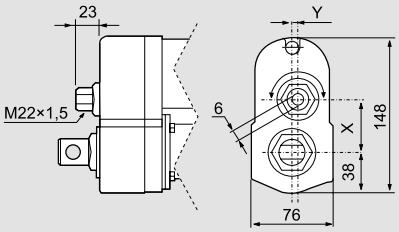

Model	X	Y
05A(B)65M	49,6	0,0
10A(B6)5M	43,3	5,2
20(21)A(B)65M	38,9	0,0

Ordering Keys

Lifting Columns

TC16

1	2	3	4	5
TC16 - 24	T12M	300	291	X

1. Model and input voltage
TC16-24 = TC16, 24 Vdc

2. Dynamic load capacity
T12M = 2000 N

3. Stroke (S)[1/3]
••• = distance in mm

4. Length of the retracted unit (L)[2]
••• = distance in mm

5. Options
X = no option
E = encoder

[1] S min. = 200 mm
S max. = 600 mm
Max. possible stroke = L × 2 - 282 mm

[2] L min. = 250 mm
L max. = 600 mm

[3] See note 2 on page 32 for information on stroke, max. cycle lenght and max. on time restrictions.

DMD

1	2	3	4
DMD24 -	10B5 -	16	PO

1. Model and input voltage
DMD12 - = DMD, 12 Vdc
DMD24 - = DMD, 24 Vdc
DMD36 - = DMD, 36 Vdc

2. Dynamic load capacity, screw type and maximum speed
05A5 - = 1100 N, acme, 54 mm/s
10A5 - = 2250 N, acme, 30 mm/s
20A5 - = 2250 N, acme, 15 mm/s
05B5 - = 2250 N, ball, 61 mm/s
10B5 - = 4500 N, ball, 30 mm/s
20B5 - = 4500 N, ball, 15 mm/s
21B5 - = 6800 N, ball, 15 mm/s

3. Stroke
04 = 4 inch (101,6 mm)
06 = 6 inch (152,4 mm)
08 = 8 inch (203,2 mm)
10 = 10 inch (254,0 mm)
12 = 12 inch (304,8 mm)
14 = 14 inch (355,6 mm)
16 = 16 inch (406,4 mm)
18 = 18 inch (457,2 mm)
20 = 20 inch (508,0 mm)
24 = 24 inch (609,6 mm)

4. Options[1]
PO = potentiometer

[1]Leave position blank for no option.

DMA

1	2	3	4
DMA22 -	20A5 -	06	

1. Model and input voltage
DMA22 - = DMA, 1 × 230 Vac
DMA42 - = DMA, 3 × 400 Vac

2. Dynamic load capacity, screw type and maximum speed
05A5 - = 1100 N, acme, 54 mm/s[1]
10A5 - = 2250 N, acme, 30 mm/s
20A5 - = 2250 N, acme, 15 mm/s
05B5 - = 2250 N, ball, 61 mm/s
10B5 - = 4500 N, ball, 30 mm/s
20B5 - = 4500 N, ball, 15 mm/s
21B5 - = 6800 N, ball, 15 mm/s

3. Stroke
04 = 4 inch (101,6 mm)
06 = 6 inch (152,4 mm)
08 = 8 inch (203,2 mm)
10 = 10 inch (254,0 mm)
12 = 12 inch (304,8 mm)
14 = 14 inch (355,6 mm)
16 = 16 inch (406,4 mm)
18 = 18 inch (457,2 mm)
20 = 20 inch (508,0 mm)
24 = 24 inch (609,6 mm)

4. Options[2]
PO = potentiometer

[1] 05A5 not possible with 400 Vac input voltage.
[2]Leave position blank for no option.

Ordering Keys

Rodless Actuators

LM80-H

1	2	3	4	5	6	7
DT24 -	B62M -	140	A	C	H	X

1. Model and input voltage
DT12 - = LM80, 12 Vdc
DT24 - = LM80, 24 Vdc

2. Load torque capacity and screw type
T68M - = 250 Nm, trapezoidal
B61M - = 400 Nm, ball
B62M - = 180 Nm, ball
B65M - = 750 Nm, ball

3. Stroke
050 = 500 mm
060 = 600 mm
070 = 700 mm
080 = 800 mm
090 = 900 mm
100 = 1000 mm
110 = 1100 mm
120 = 1200 mm
130 = 1300 mm
140 = 1400 mm
150 = 1500 mm

4. Motor position
A = 0° (standard)
B = 60°
C = 120°
D = 180°
F = 300°

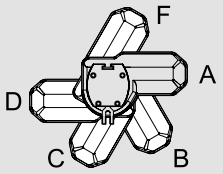

5. Motor enclosure
C = with enclosure (IP44)
U = no enclosure (IP33)

6. Mounting position
H = horizontal

7. Options
X = no option
H = manual override[1]

[1] Manual override dimensions.

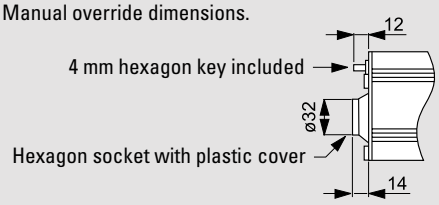

LM80-V

1	2	3	4	5	6	7
DT24 -	B62M -	140	A	C	V	X

1. Model and input voltage
DT12 - = LM80, 12 Vdc
DT24 - = LM80, 24 Vdc

2. Load torque capacity and screw type
T68M - = 250 Nm, trapezoidal
B61M - = 400 Nm, ball
B62M - = 180 Nm, ball
B65M - = 750 Nm, ball

3. Stroke
050 = 500 mm
060 = 600 mm
070 = 700 mm
080 = 800 mm
090 = 900 mm
100 = 1000 mm
110 = 1100 mm
120 = 1200 mm
130 = 1300 mm
140 = 1400 mm
150 = 1500 mm

4. Motor position
A = 0° (standard)
B = 60°
C = 120°
D = 180°
F = 300°

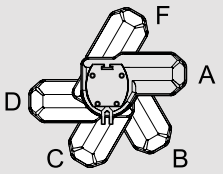

5. Motor enclosure
C = with enclosure (IP44)
U = no enclosure (IP33)

6. Mounting position and spline safety function
V = vertical with motor down, no spline safety function
F = vertical with motor down, with spline safety function

7. Options
X = no option
H = manual override (see LM80-H above for dimensions)

Ordering Keys

Rodless Actuators

LM80-I

1	2	3	4	5	6	7
DT24 -	T68M -	090	G	C	V	H

1. Model and input voltage
DT24 - = LM80, 24 Vdc

2. Load torque capacity and screw type
T68M - = 250 Nm, trapezoidal
B61M - = 400 Nm, ball
B62M - = 180 Nm, ball
B65M - = 750 Nm, ball

3. Stroke
050 = 500 mm
060 = 600 mm
070 = 700 mm
080 = 800 mm
090 = 900 mm
100 = 1000 mm
110 = 1100 mm
120 = 1200 mm
130 = 1300 mm
140 = 1400 mm
150 = 1500 mm

4. Motor position
G = in line

5. Motor enclosure
C = with enclosure (IP44)

6. Mounting position and spline safety function
V = vertical with motor down, no spline safety function

7. Options
X = no option
H = manual override[1]
E = encoder
K = manual override + encoder

[1] Manual override dimensions.

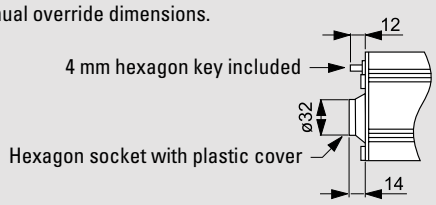

Ordering Keys

Non-driven Actuators

Electrak PPA-M

1	2	3	4
PPA00 -	01B65 -	24	N-XXX

1. Model
PPA00 - = Electrak PPA-M

2. Dynamic load capacity
01B65 - = 6670 N

3. Stroke
04 = 4 inch (101,6 mm)
06 = 6 inch (152,4 mm)
08 = 8 inch (203,2 mm)
12 = 12 inch (304,8 mm)
18 = 18 inch (457,2 mm)
24 = 24 inch (609,6 mm)
36 = 36 inch (914,4 mm)

4. Bellows option
N-XXX = no bellows
N-XXC = bellows

FA14

1	2	3	4	5
FA14 -	10A65M	35	M2	N

1. Model
FA14 - = Electrak FA14

2. Dynamic / static load capacity and screw type
05A65M = 1100 / 11350 N, acme
10A65M = 2250 / 11350 N, acme
20A65M = 2250 / 11350 N, acme
05B65M = 2250 / 18000 N, ball
10B65M = 4500 / 18000 N, ball
20B65M = 4500 / 18000 N, ball
21B65M = 6800 / 18000 N, ball

3. Stroke
05 = 50 mm
10 = 100 mm
15 = 150 mm
20 = 200 mm
25 = 250 mm
30 = 300 mm
35 = 350 mm
40 = 400 mm
45 = 450 mm
50 = 500 mm
55 = 550 mm
60 = 600 mm

4. Rear / front adapter hole position[1]
M0 = both adaptors at 0° (standard)
M1 = rear adaptor at 30°, front at 0°
M2 = rear adaptor at 60°, front at 0°
M3 = rear adaptor at 90°, front at 0°
M4 = rear adaptor at 120°, front at 0°
M5 = rear adaptor at 150°, front at 0°
MF = rear and front adaptor at 90°

5. Options
N = no option
HW = manual override[2]

[1] Definition of adapter hole positons.

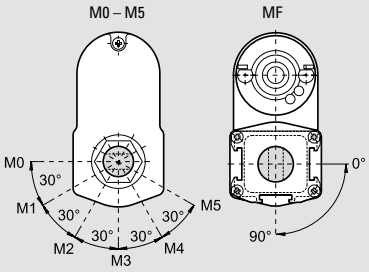

[2] Dimensions for manual override option.

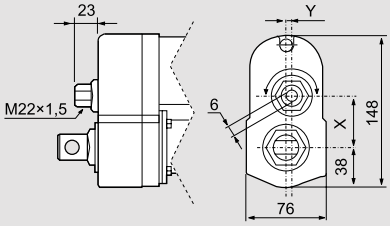

Model	X	Y
05A(B)65M	49,6	0,0
10A(B)65M	43,3	5,2
20(21)A(B)65M	38,9	0,0

- page intentionally left blank -

Glossary

A – C

Acme Screw
Acme screws are self locking and will not backdrive. They also withstand vibration and shock better than ball or worm screws and are used for applications with these characteristics. Also see “lead screw”.

Actuator Housing
The actuator housing provides environmental protection for the internal components and may also be a structural member of the actuator.

Adapters
The front and rear adapters are the connection points for mounting most Thomson actuators. The front adapter is usually a cross hole but optionally may be a tapped hole, threaded rod, or universal rod end. The rear adapter may be cast into the actuator housing or held in place with a nut.

Adjustable End of Stroke Limit Switches
The adjustable end of stroke limit switches may be moved to positions inside the full stroke of the actuator and will shut off the actuator when it reaches the limit switch. Also see “end of stroke limit switches”.

Anti Coast Brake/Electrical Brake
Depending on the load, AC ball screw actuators may coast to a stop when power is removed. This overrun is eliminated by an anti coast brake or an electrical brake. The anti coast brake (pawl type) will allow up to one revolution of the motor after power is removed. They are used on the Electrak 5 and PPA-AC with anti coast brake. An electrical brake (electrically released) operates much faster after power is removed and allow less coast than the pawl type. Electrak 205 and the PPA-AC with electrical brake use this type of brake. Also see “brake”.

Anti Rotation Mechanism
A feature available on some actuators that resolves the restraining torque within the actuator. The extension tube will not rotate on actuators with this feature.

Auto Reset Thermal Switch
An auto reset thermal will switch off the motor if it becomes to warm which means that the motor has exceeded its maximum allowed duty cycle. When the motor has cooled of the switch will close again automatically and the motor will start to run if power still is being applied to it. Also see “duty cycle”.

Ball Screw
Ball screws are highly efficient and are used for high loads and speeds. Also see “lead screw”.

Brake
Actuators using a acme or worm screw are inherently self-locking while ball screw driven actuators are not. To prevent ball screw actuators from backdriving they incorporate an anti backdriving brake (holding brake). Ball screw actuators with an AC motor can also be equipped with an anti coast brake. Also see “anti coast brake/electrical brake” and “holding brake”.

Capacitor
The AC actuators use permanent split capacitor motors and require the use of a start/run capacitor in the control circuit to operate. The controls for the AC actuators have the capacitor included in the control. For customer supplied controls, a separate capacitor is required and the part number is included on the actuator product page.

Certificates
CE certification and UL listing are the two main third party approvals available for actuators. Most of the AC actuators are UL listed as standard and UL has no standard for DC actuators under 48 Vdc. All actuators sold in the EU are CE certified while some actuators sold outside of the EU may not be. If you order your actuator outside of the EU and need a CE certification, contact the factory to verify availability and be sure to include the request on your order.

Controls
Controls can be external to the actuator and provide the actuator with the correct voltage, have either membrane or pendant operators and some have position indicators. The Pro series also has internal controls that continuously monitor the operation of the actuator.

Cover Tube
The cover tube provides protection for the lead screw and provides protection and support for the extension tube. For the Electrak 100 and PPA and as an option on the Electrak 205 actuators, the cover tube also provides the rear mounting connection.

Customization
Even the most versatile actuator may not always suit all applications. But whatever your need is, our engineers are ready to help you to customize the actuators according to your requirements. We build more exclusive actuators than anyone else and have decades of experience of producing actuators to meet special needs.

Glossary

D – G

Duty Cycle

$$\text{Duty cycle} = \frac{\text{on time}}{(\text{on time} + \text{off time})}$$

Example: 15 seconds on, 45 seconds off

$$\frac{15\ \text{s}}{(15\ \text{s} + 45\ \text{s})} = 25\%\ \text{duty cycle}$$

The duty cycle is a function of the maximum rated load and the ambient temperature. Ambient temperatures above the stated will affect the duty cycle negatively while lower temperatures and/or lower load will affect it positively. Review the following duty cycle versus load charts when higher duty cycles are needed for Electrak 1, Electrak 10 or DMD actuators.

Electrak 1, Electrak 1SP

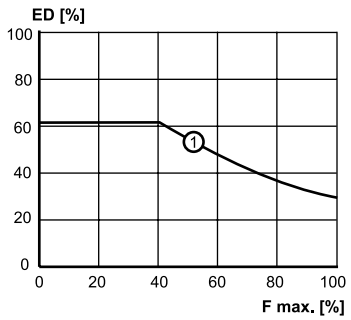

ED: duty cycle in percent at 25° C
F max: percent of maximum rated load
1: all Electrak 1 and Electral 1SP models

Electrak 10, DMD

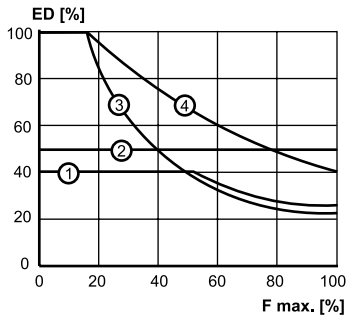

ED: duty cycle in percent at 25° C
F max: percent of maximum rated load
1: D • • -10A5 (acme screw)
2: D • • -20A5 (acme screw)
3: D • • -05B5 (ball screw)
4: D • • -20B5 (ball screw)

Dynamic Load

The dynamic load rating is how much load the actuator will move when power is applied. Also see “load rating”.

Dynamic Braking

Dynamic braking is a feature on the Pro series which short circuits the motor windings at power off resulting in a shorter coasting distance before the actuator comes to a complete stop. Dynamic braking can be accomplished on other dc actuators by wiring the control to short the motor leads when power is removed.

Electronic Limit Switches (ELS)

ELS stands for Electronic Limit Switches and it is a current sensing function used in some actuator control models. The ELS senses the current and if the current exceeds a pre-set level the control cuts the power to the motor. This function can be used to detect and stop at the ends of the actuator stroke or to stop the actuator if it runs into an obstacle.

Electronic Load Monitoring (ELM)

A built-in microprocessor inside the Pro series actuators continuously monitors the performance of the actuator. The microprocessor will stop the movement at the end of stroke, in case of mid stroke stall, at overload conditions or if the duty cycle is too high. It also eliminates the need of a clutch and provides dynamic braking.

Encoder Feedback

Encoders provide a digital output signal that can be used to determine the position of the extension tube. An encoder equipped actuator must return to a “home” position if power is removed and restored in order to reset its starting point. Also see “potentiometer feedback”.

End of Stroke Limit Switches

End of stroke limit switches are switches that are incorporated in some actuator models, either as standard or as an option, that will shut off power when the end of stroke is achieved. Also see “fixed end of stroke limit switches” and “adjustable end of stroke limit switches”.

End Play (Backlash)

The stack up of tolerances within the lead screw assembly and gearing allowing some linear movement of the extension tube without rotating the motor. Typical end play or backlash varies by model. The range is 0,3 to 2,0 mm.

Extension Tube

The extension tube slides in and out of the actuator and is connected via the front adaptor to the load being moved or positioned.

Fixed End of Stroke Limit Switches

The fixed end of stroke limit switches allow the full stroke of the actuator to be used and will shut off power when the end of stroke is achieved. Also see “end of stroke limit switches”.

Glossary

H – Life

Holding Brake

The Electrak 1, 2, 050, 150 and some Pro series incorporate an acme screw which is inherently self-locking while Electrak 5, 10, 100, 205 and the high load Pro series actuators have a ball screw drive incorporating an anti backdriving brake (holding brake) that engages when the actuator has come to a complete stop. Also see “brake”.

Input Voltage

The nominal voltage required to operate the actuator. All actuators will accept at least a ± 10 % variation of the nominal voltage but a change in the voltage will result in a change of the speed of dc actuators. Controls are available that accept 115 or 230 Vac input and provide 24 Vdc output to operate 24 Vdc actuators.

Installation Instructions

Each actuator has an installation manual to answer typical questions about mounting and wiring the actuators.

Lead Screw

Actuators use four different types of lead screws depending on the configuration and load requirements of the actuator. Ball screws are highly efficient and are used for high loads and speeds. Acme, worm and trapezoidal screws are self locking and will not backdrive. Acme and trapezoidal screws withstand vibration and shock better than the other and are used for applications with these characteristics.

Lifetime Expectancy

Life is a function of load, stroke length and how often the overload clutch is operated. The following life versus load charts will provide a life estimate for your particular application. Contact customer service for more information or for information on other actuator models.

Electrak 1, Electrak 1SP

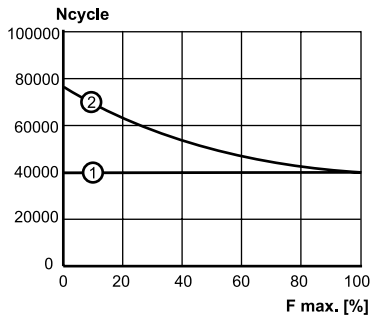

Ncycle: life in number of cycles (one cycle = extend and retract)
F max: percent of maximum rated load
1: Electrak 1 when using the internal limit switches for end of stroke
2: both models when using external limit switches for end of stroke

Electrak 10, DMD - Acme Screw Models

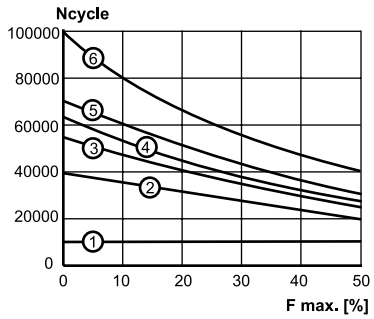

Ncycle: life in number of cycles (one cycle = extend and retract)
F max: percent of maximum rated load
1: all models using the clutch at end of stroke
2: D • • -20A5, 12 inch stroke
3: D • • -20A5, 8 inch stroke
4: D • • -10A5, 12 inch stroke
5: D • • -10A5, 8 inch stroke and D • • -20A5, 4 inch stroke
6: D • • -10A5, 4 inch stroke

Contact customer service if you need life estimates for loads above 1125 N or stroke lengths above 12 inch.

Electrak 10, DMD - Ball Screw Models

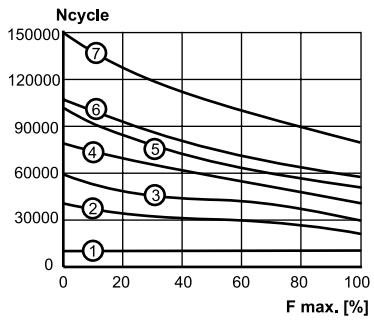

Ncycle: life in number of cycles (one cycle = extend and retract)
F max: percent of maximum rated load
1: all models using the clutch at end of stroke
2: D • • -10B5 and D • • -20B5, 12 inch stroke
3: D • • -10B5 and D • • -20B5, 8 inch stroke
4: D • • -05B5, 12 inch stroke
5: D • • -10B5 and D • • -20B5, 4 inch stroke
6: D • • -05B5, 8 inch stroke
7: D • • -05B5, 4 inch stroke

Contact customer service if you need life estimates for loads above 4500 N or stroke lengths above 12 inch.

Electrak 5, DMA - Ball Screw Models

Glossary

Lift – O

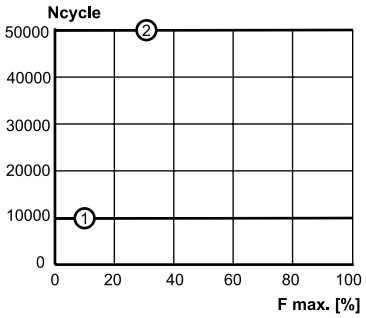

Ncycle: life in number of cycles (one cycle = extend and retract)
F max: percent of maximum rated load
1: all models using the clutch at end of stroke
2: all models using the anti-coast brake at end of stroke only

The above chart is only valid for ball screw models with rated load up to 4500 N and stroke lengths up to 12 inch. Contact customer service if you need life estimates for acme screw models or for higher loads or longer stroke lengths.

Lifting Columns
Lifting columns provide a stable base for adjusting the height of tables or platforms. The column provides both the lifting force and the ability to resolve high moment forces from off axis loads.

Linear Actuators
Actuators providing a linear thrust via an extension tube to lift, lower, push, pull or position a load.

Load Rating
The load rating is the minimum amount of force the actuator will provide during its lifetime. The load rating of all rod style actuators is the same for both compression and tension loads. Also see “dynamic load”, “static load” and “tension and compression load”.

Manual Override (Hand Wind)
Allows manual operation of the actuator in both directions in case of a power failure. The actuator accepts a standard hexagon key to rotate the motor in either direction. Optional on some models and standard on the Pro series.

Maximum On Time
The maximum amount of time an actuator may operate without stopping to “cool off”. For high load and long stroke actuators this may be one extend and retract cycle. The actuator should not exceed 25% duty cycle at full rated load. If no maximum on time is stated then the maximum on time are equal to one full cycle at the maximum dynamic load for the actuator in question.

Mounting
Electrak actuators are quickly and easily mounted by slipping pins through the holes on each end of the unit and into brackets on the machine frame and the load. Electrak 100 units must be mounted by the cover tube and a swivel rod end. PPA actuators are mounted by the rear trunnions on the cover tube and the clevis on the extension tube. The Electrak 205 can be mounted by either the rear clevis or by a tube mount. 12,7 mm diameter solid pins (6,35 mm solid pins for Electrak 1 and 050) provide maximum holding strength and a retaining or cotter pin on each end will prevent the solid pin from falling out of its mounting bracket. Roll or spring type mounting pins should be avoided. The mounting pins must be parallel to each other as shown below (Fig. a). Pins which are not parallel may cause the actuator to bind. The load should act along the axis of the actuator since off center loads may cause binding (Fig. b).

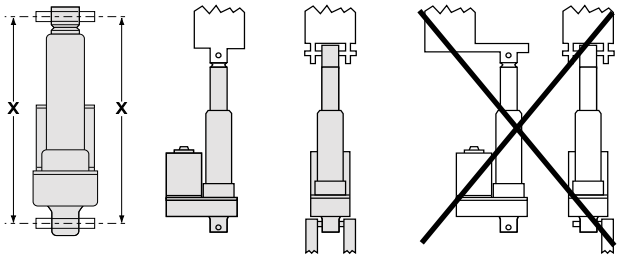

Fig. a Fig. b

Non-driven Actuators
Actuators supplied without a motor and driven manually or by a customer supplied motor.

Operating and Storage Temperature
The operating temperature is the range in which the actuator may be safely operated. For the high end of the range, the duty cycle will be lower than 25 %. All actuators can be stored or transported at the same temperature as the operating temperature. Contact customer support if the operating temperature will be exceeded during storage or transportation.

Output Voltage
Output voltage is the voltage from the control to run the actuator. The controls for dc actuators have 24 Vdc output. The controls for ac actuators have either 115 or 230 Vac output.

Overload Clutch
Electrak 050, 2, 5, 10, 100, 205 and PPA series linear actuators are protected by a load limiting mechanical clutch which prevents the motor from stalling at either end of the actuator stroke. It will also slip when the factory-set load limit is exceeded. The clutch is a ball detent design, assuring a consistent slip point and long life.

Glossary

P – Si

Potentiometer Feedback
Potentiometers provide an analog output signal that can be used to determine the position of the extension tube. A potentiometer will "remember" its position if power is removed and restored. All potentiometers are set to a minimum value on full retract except for the EU versions of Electrak 5 and Electrak 10 where the minimum value are set on full extend. Also see "encoder feedback.

Programmable Limit Switches
An optional control contained inside the Pro series to which an external programming box or customer supplied switches can be connected to set and reset the end of stroke limits as often as needed. The programming box has a "jog to position" switch and a "set limit" switch.

Protection Class
The protection class refers to the environmental rating of the enclosure. The first digit applies to airborne contaminants and the second digit to water/moisture.

IP33: protected against the penetration of solid objects with a diameter greater than 12 mm and against direct sprays of water up to 60 degrees from vertical.

IP44: protected against the penetration of solid objects with a diameter greater than 1 mm and against water sprayed from any direction.

IP45: protected against the penetration of solid objects with a diameter greater than 1 mm and low pressure water jets from any direction.

IP51: protected from dust and vertical dripping water/ condensation.

IP52: protected from dust and dripping water/condensation falling at an angle up to 15 degrees from vertical.

IP56: protected from dust and high pressure water jets from any direction.

IP65: dust tight and protected against low pressure water jets from any direction.

IP66: dust tight and protected against high pressure water jets from any direction.

IP67: dust tight and protected against the effect of immersion in water between 150 mm (5.9 inch) and 1 meter (39.4 inch).

Pulse Width Modulation (PWM)
Pulse width modulation control works by switching the power supplied to the motor on and off very rapidly. The DC voltage is converted to a square-wave signal, alternating between fully on and zero, giving the motor a series of power "kicks". If the switching frequency is high enough, the motor runs at a steady speed due to its fly-wheel momentum. By adjusting the duty cycle of the signal (modulating the width of the pulse, hence the 'PWM'), the time fraction it is "on", the average power can be varied, and hence the motor speed. All DC actuators can be speed controlled by PWM within certain limits without any adjustments except for the Pro series that due to the internal electronics must have a steady power supply.

Restraining Torque
The torque which is developed between the clevis on the extension tube and rear mount(clevis or trunnion) when the unit extends or retracts and ratchets the clutch (Fig. c).

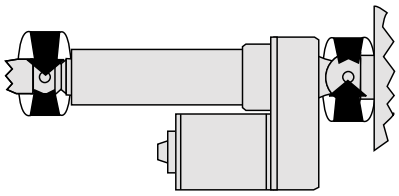

Fig. c

Rodless Actuators
Rodless actuators provide support for the load as well as thrust. The load is supported and moved by a carriage on the actuator rather than pushed or pulled by an extension rod. Rodless actuators are ideal for applications requiring long strokes (up to 1500 mm), high speeds (up to 110 mm/s), movement of the load within the shortest envelope possible or the load supported by the actuator.

RoHS Compliance
All actuators, controls and accessories sold in the EU are RoHS compliant unless otherwise stated, while products sold outside of the EU may not be. If you order an actuator outside of the EU and need it to be RoHS compliant, contact the factory to verify availability and be sure to include the request on your order.

Rotary Actuators
Actuators providing a rotary output to position a load, turn a winch, or rotate a gear or sprocket.

Service and Maintenance
Actuators are generally maintenance free. The Electrak 2, 5, 10, 100, 205 and Pro series have repair kits available from your local distributor or OEM.

Signal Follower Input / Control
An optional control contained inside the Pro series actuators that will cause the extension tube position to follow a customer supplied potentiometer signal. Also known as a position follower control.

Sizing and Selection
The Danahermotion.com web site includes a product advisor that can be used to walk through the decision process for picking the best actuator and to get the ordering data for your choice. Go

Glossary

Sp – W

to www.danahermotion.com/linear_actuator_advisor to find out more.

Speed
DC actuators have a direct load/speed relationship. As the load increases, the speed of the dc actuators decreases. There are curves on each product page to show the speed from no load to full rated load. AC actuators have very little speed fluctuations based on load but there are load/speed curves on all the ac actuator product pages.

Spline Safety Function
An optional safety function on the rodless actuator (LM80) that will stop downward motion in case the carriage (the moving member) collides with an obstacle. The motor will keep running but the carriage will stand still and not pull down on the obstacle. When reversing the motor rotation the carriage will automatically start to move upwards again.

Static Load
The static load rating is how much load the actuator will hold with power off. The static load rating is normally twice the dynamic load rating. Also see “load rating”. If nothing else is stated the static load rating is for the actuator extension tube being fully retracted. The static load rating will decrease as the tube extends.

Synchronous Operation
Motor speed cannot be controlled with enough precision to ensure that the actuators will remain synchronized and a binding effect could take place. Non-driven actuators may be mechanically linked and thereby synchronized. Actuators equipped with an encoder can also be synchronized using controls designed for synchronous operation.

Tension and Compression Load
A tension load tries to stretch the actuator and a compression load tries to compress the actuator (Fig. d). Most actuators can manage the same tension and compression load. Also see “load rating”.

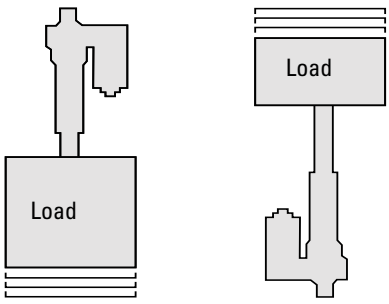

Fig. d

Trapezoidal Screw
Screw type with similar characteristics as an acme screw. This type of screw is used in TC16 and LM80. Also see “acme screw” and “lead screw”.

Vent Tube
The Electrak 050 and 150 have a breather tube in the wiring harness to allow the actuator to operate without creating a vacuum and drawing water through the seals on the cover tube.

Voltage Drop
Long leads/cables between the power source and the actuator will result in a voltage drop for DC units. This voltage drop can be avoided by sizing the leads in accordance with the following lead
cross section selection table. The table is based on an ambient temperature of 30 °C or less. A higher ambient temperature may result in the need for a greater lead cross section.

Lead Cross Section Selection Table [mm²]

Current draw [A]	Cable length [m]	Actuator input voltage [Vdc}		
		12	24	36
0 - 10	0 - 3	1,5	1,5	1,5
	3 - 6	2,5	1,5	1,5
	6 - 10	4	1,5	1,5
10 - 15	0 - 3	1,5	2,5	1,5
	3 - 6	2,5	2,5	1,5
	6 - 10	4	2,5	1,5
15 - 20	0 - 3	2,5	-	-
	3 - 6	4	-	-
	6 - 10	6	-	-
20 - 28	0 - 3	4	-	-
	3 - 6	6	-	-
	6 - 10	10	-	-
28 - 35	0 - 3	6	-	-
	3 - 6	6	-	-
	6 - 10	10	-	-

Worm Screw
Worm screws are self locking and will not backdrive. This type of screw is used in Electrak 050. Also see “lead screw”.

Application Data Form

Worksheet

Application Data Form*

Submitted by:	Phone:	Date:

1. Company name	20. Do you need any special retracted length (cross hole c/c in mm)?
2. Street address	21. Is anti-rotation of the extension tube required (yes/no)?
3. City-state, zip	22. What is the input voltage?
4. Contact name	23. Do you need any of the optional features of the actuator?
5. Phone	24. How will the actuator be connected (standard or special cabling)?
6. Fax	25. Is mating connector required if connector is included in the actuator?
7. E-mail	26. Do you need any special paint or finish?
8. What is the estimated annual volume?	27. Is manual override necessary?
9. What is the target price?	28. What are the environmental conditions (dusty, outdoors, wash down)?
10. What is the current or alternative solution?	29. What is the operation temperature range in Celsius?
11. How much load is moved in Newton?	30. What is the duty cycle (on-time / on-time + off-time) in seconds?
12. How much load do you need to hold in Newton?	31. Do you need any certificate (UL, CE, etc.)?
13. How will the actuator be mounted (horizontal/vertical)?	32. Do you require any print (dwg, dxf, faxed)?
14. Is the load trying to stretch or/and compress the actuator?	33. Describe any additional requirements (packaging, labeling, etc.)
15. What speed do you want the actuator to move in mm/s?	
16. What is the life of the unit in cycles (one cycle = extend and retract)?	
17. What is the stroke length?	
18. How will the actuator be mounted to the extension tube?	
19. How will the actuator be mounted to the rear adaptor?	

* Please enter all fields in the form and send it and any drawing to customer service by mail or fax. See the back of the catalog for the nearest location.

Application Data Form

Drawing/notes

EUROPE

United Kingdom
Thomson
Fishleigh Road
Roundswell Business Park
Barnstaple
Devon, EX31 3UD
Phone: +44 (0) 1271 334 500
Fax: +44 (0) 1271 334 501
E-mail: sales.uk@thomsonlinear.com

Germany
Thomson
Nürtinger Straße 70
72649 Wolfschlugen
Phone: +49 (0) 7022 504 0
Fax: +49 (0) 7022 504 405
E-mail: sales.germany@thomsonlinear.com

France
Thomson
Phone: +33 (0) 243 50 03 30
Fax: +33 (0) 243 50 03 39
E-mail: sales.france@thomsonlinear.com

Italy
Thomson
Largo Brughetti
20030 Bovisio Masciago
Phone: +39 0362 594260
Fax: +39 0362 594263
E-mail: info@danahermotion.it

Spain
Thomson
Rbla Badal, 29-31 7th, 1st
08014 Barcelona
Phone: +34 (0) 9329 80278
Fax: + 34 (0) 9329 80278
E-mail: josep.estaran@thomsonlinear.com

Sweden
Thomson
Estridsväg 10
29109 Kristianstad
Phone: +46 (0) 44 24 67 00
Fax: +46 (0) 44 24 40 85
E-mail: sales.scandinavia@thomsonlinear.com

USA, CANADA and MEXICO

Thomson
203A West Rock Road
Radford, VA 24141, USA
Phone: 1-540-633-3549
Fax: 1-540-633-0294
E-mail: thomson@thomsonlinear.com
Literature: literature.thomsonlinear.com

ASIA

Asia Pacific
Thomson
Unit A, 16 Floor, 169 Electric Road
Manulife Tower, North Point, Hong Kong
Phone: +852 2503 6581
Fax: +852 2571 8585
E-mail: richard.teo@thomsonlinear.com

China
Thomson
Rm 2205, Scitech Tower
22 Jianguomen Wai Street
Beijing 100004
Phone: +86 400 6661 802
Fax: +86 10 6515 0263
E-mail: sales.china@thomsonlinear.com

India
Thomson
Unit No 2, SDF 1 Seepz Andheri
Mumbai 400 096
Phone: +91 22 2829 4058
Fax: +91 22 2839 4036
E-mail: richard.teo@thomsonlinear.com

Japan
Thomson
Minami-Kaneden 2-12-23, Suita
Osaka 564-0044 Japan
Tel: +81-6-6386-8001
Fax: +81-6-6386-5022
E-mail: dicgj_inquiry@danaher.co.jp

Korea
Thomson
#407, Kins Tower, Bundang Intellige 1, 25-1
Jeongja-dong, Bundang-gu, Seongnam-city,
Gyeonggi-do, Korea
Phone: +82 31 784 8972
Fax: +82 31 784 8980
E-mail: aaron.kim@thomsonlinear.com

www.thomsonlinear.com

EU200609-02 LIM 2k TJO 5/2011 ENG
Specifications are subject to change without notice. It is the responsibility of the product user to determine the suitability of this product for a specific application. All trademarks property of their respective owners. © Thomson Industries, Inc. 2011

THOMSON®
Linear Motion. **Optimized.**™