SMITH® JAY R. SMITH MFG. CO.®
MEMBER OF MORRIS GROUP INTERNATIONAL
POST OFFICE BOX 3237
MONTGOMERY, ALABAMA 36109-0237 (USA)
TEL: 334-277-8520 FAX: 334-272-7396 www.jrsmith.com

CUSTOMER DRIVEN SINCE 1926

MEMBER OF:

LOCATION

# GENERAL PURPOSE ROOF DRAINS

## ROOF DRAIN WITH ADJUSTABLE EXTENSION

**FUNCTION:** Used in flat roofs of any construction. The adjustable extension sleeve permits adjustment from a minimum of 1 1/4" (32) to a maximum of 4 1/4" (110), easily accommodating up to 3" (76) of varying insulation thicknesses. The positive threading allows smooth perimeter movement and circumferential support of the top at any adjusted elevation. Large low profile dome provides sufficient free area for quick drainage of rainwater and protection against debris.

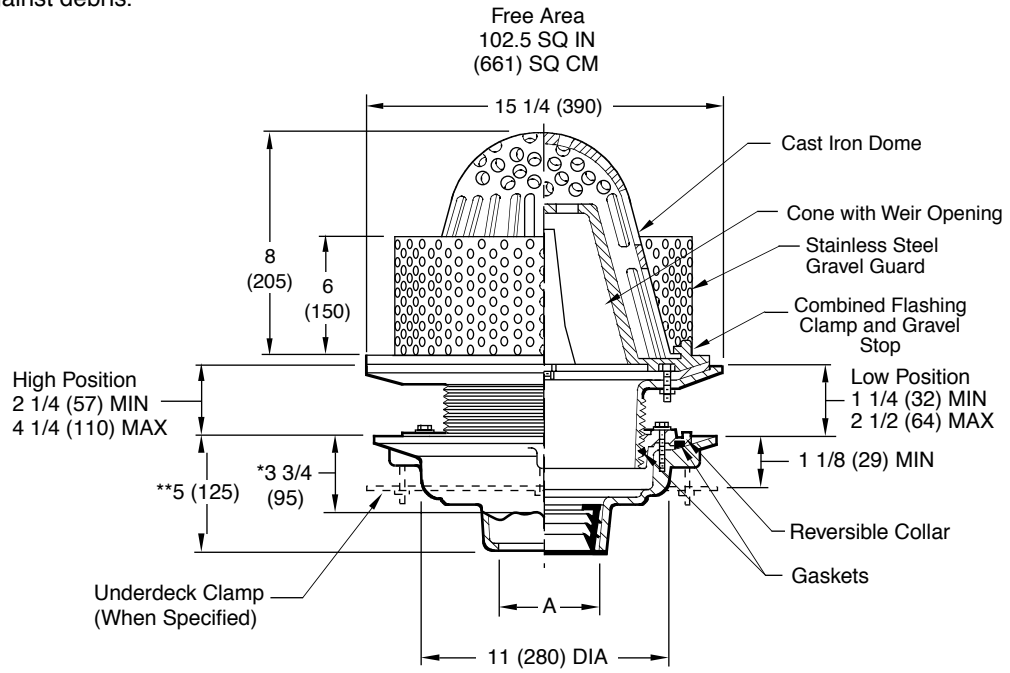


A (Pipe Size) = 02(50), 03(75), 04(100), 05(125) or 06(150)

☐ Fig. 1015C . . . . . CAULK OUTLET
☐ Fig. 1015Y . . . . . NO-HUB OUTLET

recommended deck opening

| | |
|---|---|
| with suffix -R | 17 (430) DIA |
| less Suffix -R | 14 (355) DIA |

*This dimension to internal stop of Speedi-Set Gasket
**Same for Caulk, NO-HUB and Speedi-Set, 3 3/4 (95) for Threaded

**REGULARLY FURNISHED:**
Duco Cast Iron Body with Adjustable Extension Sleeve, Reversible Collar, Combined Flashing Clamp and Gravel Stop, with Cast Iron Dome.

**VARIATIONS:**
- ☐ Expansion Joint (Specify Fig. 1710)
- ☐ "L" Shaped Underdeck Clamp -CL
- ☐ L Speedi-Set Service Weight 02(50), 03(75) & 04(100)" sizes only
- ☐ LXH Speedi-Set Extra Heavy 02(50), 03(75) & 04(100)" sizes only
- ☐ Secondary Flashing Clamp -C2
- ☐ Sump Receiver -R
- ☐ Underdeck Clamp -C
- ☐ Vandal Proof Dome -U
- ☐ Side Outlet Drain (Specify Fig. 1025)
- ☐ T Threaded Outlet

**OPTIONAL MATERIALS:**
- ☐ Galvanized Cast Iron -G

**NOTE:** Dimensions shown in parentheses are in millimeters.

| REV. | DATE | DESCRIPTION | BY | CKD. BY | WEIGHT POUNDS | VOLUME CUBIC FEET | FIGURE NUMBER |
|---|---|---|---|---|---|---|---|
| | | | | | | | 1015-85-CAN |

DRAWING NUMBER S1015-85-CAN
SIZE A
SCALE: NONE
DATE: 2-20-01
APPROVED BY:
CHECKED BY:
DRAWN BY: RN
FIGURE NUMBER 1015-85-CAN

WE CAN ASSUME NO RESPONSIBILITY FOR USE OF SUPERSEDED OR VOID DATA
DIMENSIONS ARE SUBJECT TO MANUFACTURERS TOLERANCE AND CHANGE WITHOUT NOTICE