WWW.METPOSITE.COM
METPOSITE™
FLAT METAL WALL SYSTEMS
503.981.5900 FAX 503.981.5901 SALES@METPOSITE.COM
PO BOX 156, HUBBARD, OREGON 97032

Job Name _____ *Metal* _____ *Color* _____ *Date* _____

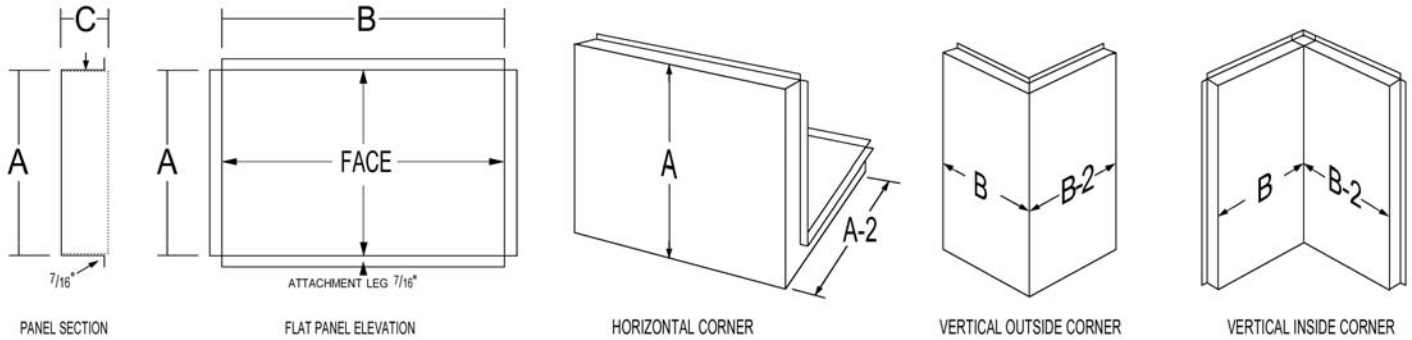

Important:

Please indicate whether the dimensions below represent the size of the opening in which the panel(s) are to be installed or size of the actual panel face. Typical joint spacing is 1/2". Please contact your Metposite project engineer for more information on tolerances and recommended clearances. Take extreme care to your measurements correct. Metposite is not responsible for unusable panels due to incorrect measurements.

Panel ID	A Face	A-2 Face *Corner panel only*	B Face	B-2 Face *Corner panel only*	C Thick	Quanity	Notes: indicate if panel is an inside/outside corner and any other information unique to panel.

Example of Panel Order Form
This page is available
for printing or download online at
www.metposite.com/details_downloads.htm