RC10 T5M TEAM KIT **Setup Sheet**

Driver: _____ **Date:** _____
Track: _____ **Event:** _____

Front Suspension:

Camber: _____ °
Total Toe: _____ °
Ride Height: _____
Arm Type: _____
Tower Type: _____
Caster Block Insert: _____ °
Kick-Up Angle: _____ °
Wheel Hex: _____
Notes:

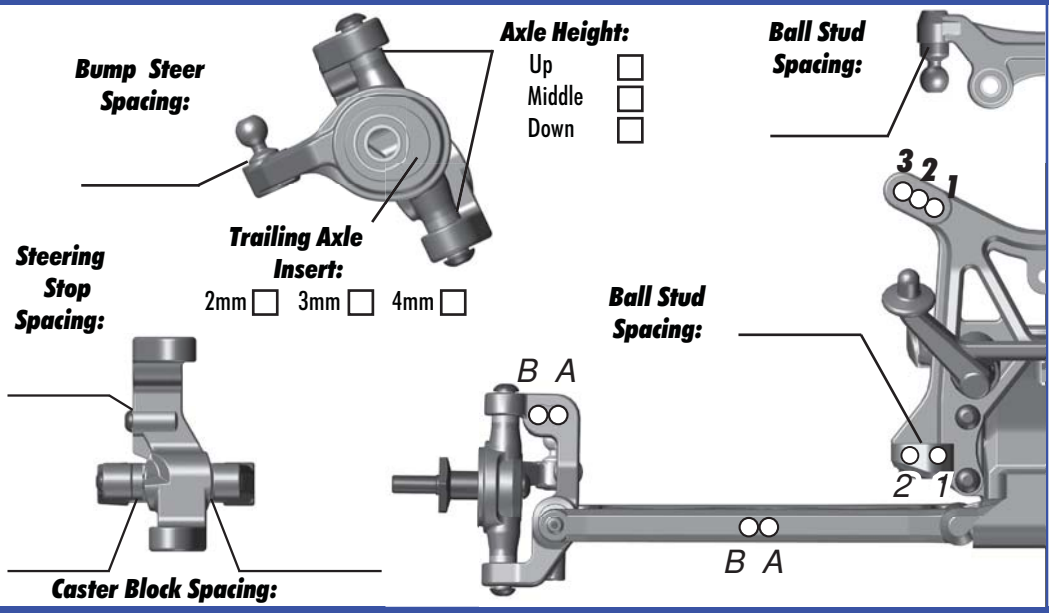

Rear Suspension:

Camber: _____ °
Ride Height: _____
Wheel Hex: _____
Hub Spacing:
Forward ☐ Middle ☐ Back ☐
Notes:

Anti Roll Bar:
None ☐
Black (1.2mm) ☐
Silver (1.3mm) ☐
Gold (1.4mm) ☐

Rear Hub Link Setting:
A (C B A) B (B A)
Up ☐
Down ☐

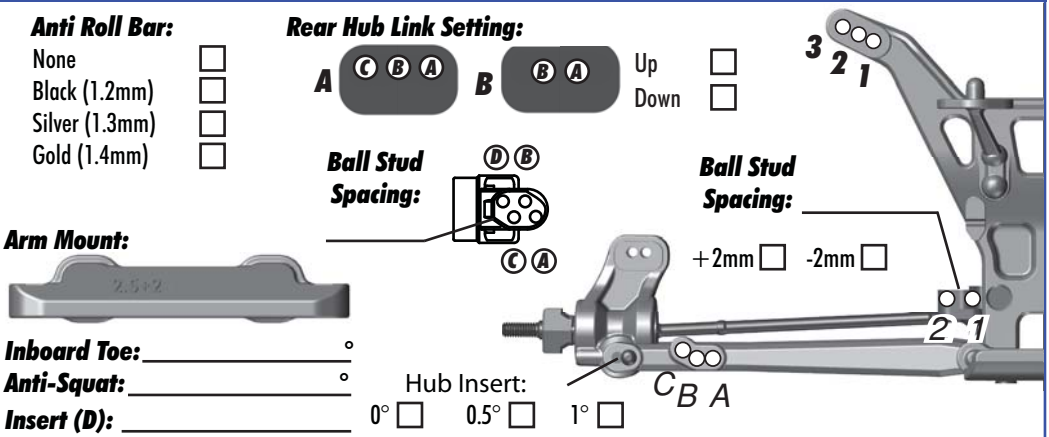

Electronics:

Radio: _____ **Servo:** _____
EPA: Throttle: _____ % **Brake:** _____ %
ESC: _____
ESC Settings: _____
Motor: _____
Wind: _____ **Timing:** _____
Pinion: _____ **Spur:** _____
Battery: _____
Battery Position: _____

Drivetrain:

Differential:
3 Gear: ☐ **4 Gear:** ☐
Ball Diff: ☐ **Gear Diff:** ☐
Notes:

Slipper Clutch:

Type: _____
# of Pads: _____
Notes: _____

Shocks:

	Front	Rear
Piston:		
Oil:		
Spring:		
Limiters:		
Cup Offset:		
Stroke:		
Free Length:		
Notes:		

Track Info:

Size:	Small ☐	Medium ☐	Large ☐	Extra Large ☐
Surfaces:	Dirt ☐	Carpet ☐	Astroturf ☐	Multi Surface ☐
Traction:	Low ☐	Medium ☐	High ☐	Very High ☐
Moisture:	Dry ☐	Damp ☐	Wet ☐	
Condition:	Indoor ☐	Outdoor ☐	Dusty ☐	Hard Packed ☐
	Bumpy ☐	Grooved ☐	Smooth ☐	Loamy ☐

Temperature: Ambient: _____ Track: _____
Notes:

Tires:

Tires (F/R): _____ / _____
Compound (F/R): _____ / _____
Insert (F/R): _____ / _____
Wheel (F/R): _____ / _____
Notes: _____

Body & Wing:

Body: _____
Wing: _____
Notes:

Race Results:

Qualify: _____ **Main:** _____
Finish: _____ **TQ:** ☐
Best Lap Time: _____

Vehicle Comments:

Total Vehicle Weight: _____